体积小、重量轻、噪音小、震动小、高效节能、绿色环保、安全稳定


**浙江商业机械厂有限公司**

ZHEJIANG COMMERCIAL MACHINERY FACTORY CO., LTD

地址：中国浙江省杭州市下城区石桥街道水车路81号

Add:No.81,Shuiche Road,Shiqiao Community,Xiacheng District,Hangzhou City,Zhejiang Province,China

销售热线(Tel):0571-88137929

服务热线(Tel)：0571-88133312

传真(Fax)：0571-88141031　邮编(PC)：310022

网址：//www.xy-zl.com

邮箱(E-mail)：yunfei.han@163.com


注：样本参数如有更改，恕不另行通知，照片、外形图以实物为准。

BR SERIES SEMI-HERMETICALLY SEALED REFRIGERANT COMPRESSORS

# BR系列半封闭制冷压缩机

XUEYING

45 years 专注制冷

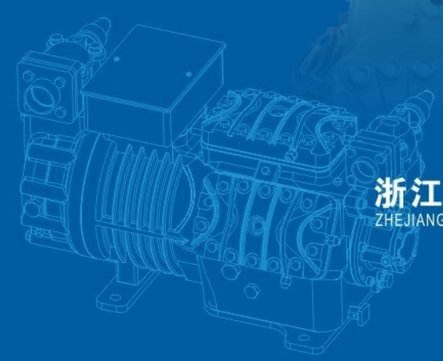

**浙江商业机械厂有限公司**

ZHEJIANG COMMERCIAL MACHINERY FACTORY CO.,LTD

www.xy-zl.com

扫一扫 更多详情

# 雪的世界 鹰的精神

坚韧、雄伟、睿智、不断超越……
雪峰巍峨，历经千百年的磨砺；雄鹰壮志，汇聚天地间的灵气。
雪鹰，翱翔天际，显恢弘之势，汇集各类人才，构筑时代经典，
成就一份辉煌事业，造就一个百年企业！

Tough,grand,sagacious, continuously exceed...
The snow mountain is towering, Passing through all trials for hundreds and thousands of years;
The lofty ideal of the eagle is combined with all aspirations between heaven and earth.
The snow eagle, flying in the sky, is shown the grandness;
To gather all kinds of talents, to construct classic of the times,
To achieve an illustrious undertaking and to build a centurial enterprise!

# 目录 CONTENTS

企业介绍 Company introduction / 01
品质保证 Quality assurance / 03
使用范围 Range of use / 06
技术参数 Technical parameters / 07
编号说明 Number indicates / 08
制冷量表 Refrigeration scale / 09
外 形 图 The outline drawing / 15

# Enterprise Introduction
# 企业简介

浙江商业机械厂是专业设计、制造各种制冷压缩机、冷凝压缩机组、低温复叠机组、冷水机组、船用机组、组合冷库等冷冻冷藏设备的企业，是国内最大的半封闭制冷压缩机生产厂家之一，产品销量在国内同行业中名列前茅。2014年半封闭压缩机产销量突破30000台，产品销售遍布全国，并远销欧洲、东南亚各地。

企业积极响应全球环保、节能的绿色浪潮，提倡以绿色环保制冷剂为制冷工质。近年来企业致力于环保工质R32半封闭活塞式制冷压缩机的研发，产品即将投放市场。

Zhejiang Commercial Machinery Factory is a professional design and manufacture all kinds of refrigeration compressor, compressor condensate, low temperature cascade units, chillers, marine unit, the combination of cold storage and other refrigeration equipment company, is the largest manufacturer of semi-hermetic refrigeration compressors One of the products sold in the domestic industry in the forefront. Semi-hermetic compressors in 2014 exceeded 30,000 production and sales, product sales all over the country and exported to Europe, Southeast Asia.
Enterprises to actively respond to global environmental protection, energy saving, green wave, promoting a green refrigerant refrigerant. In recent years, companies committed to environmental protection refrigerant R32 refrigeration semi-hermetic piston compressor research and development, product to be put on the market.

美国“CINCINNATI”卧式（CNC）加工中心
Horizontal CNC Machining Center from US Cincinnati

总装车间一角
General Assembly Plant

美国“Gi ddings & Lewis”三坐标（CNC）测量仪
Tri-coordinate CNC Measuring Machine from US Gi ddings & Lewis

美国“Fadal”立式（CNC）加工中心
Vertical CNC Machining Center from US Fadal

# R22

基于吸气温度20℃，液体没有过冷，电机转速=1450转/分（50Hz）
Suction temperature 20℃, No liguid subcooling, Rotate speed of the motor is 1450 rpm (50Hz)

## 制冷量表
REFRIGERATION SCALE

| 型号 Model | 冷凝温度 Condensing temperature | 制冷量 $Q_0$（KW） Refrigerating capacity $Q_0$ (KW) 蒸发温度 ℃ Evaporating temperature ℃ | | | | | | | | | | | | | | |
|---|---|---|---|---|---|---|---|---|---|---|---|---|---|---|---|---|
| | | 12.5 | 10 | 7.5 | 5 | 0 | -5 | -10 | -15 | -20 | -25 | -30 | -35 | -40 | -45 | -50 |
| BR20DS6-36.8 | 30 | | | | | | | | | 35.5 | 29.7 | 24.5 | 19.9 | 15.9 | 12.4 | 9.2 |
| | 40 | | | | | | | | | 34.8 | 29.1 | 24.0 | 19.6 | 15.6 | 11.9 | 8.6 |
| | 50 | | | | | | | | | 34.1 | 28.5 | 23.7 | 19.2 | 15.2 | | |
| BR25DS6-42.3 | 30 | | | | | | | | | 40.8 | 34.1 | 28.2 | 22.9 | 18.3 | 14.2 | 10.5 |
| | 40 | | | | | | | | | 39.9 | 33.4 | 27.6 | 22.5 | 17.9 | 13.7 | 9.9 |
| | 50 | | | | | | | | | 39.1 | 32.8 | 27.1 | 22.1 | 17.5 | | |
| BR30DS6-50.5 | 30 | | | | | | | | | 48.8 | 40.8 | 33.7 | 27.4 | 21.9 | 17.0 | 12.6 |
| | 40 | | | | | | | | | 47.8 | 40.0 | 33.0 | 26.9 | 21.4 | 16.4 | 11.8 |
| | 50 | | | | | | | | | 46.8 | 39.2 | 32.5 | 26.4 | 20.9 | | |
| BR40DS6T-73.6 | 30 | | | | | | | | | 71.1 | 59.4 | 49.1 | 39.9 | 31.9 | 24.8 | 18.3 |
| | 40 | | | | | | | | | 69.6 | 58.2 | 48.0 | 39.2 | 31.2 | 23.9 | 17.2 |
| | 50 | | | | | | | | | 68.1 | 57.1 | 47.3 | 38.4 | 30.4 | | |
| BR50DS6T-84.6 | 30 | | | | | | | | | 81.6 | 68.2 | 56.4 | 45.8 | 36.6 | 28.4 | 21 |
| | 40 | | | | | | | | | 79.8 | 66.8 | 55.2 | 45.0 | 35.8 | 27.4 | 19.8 |
| | 50 | | | | | | | | | 78.2 | 65.6 | 54.2 | 44.2 | 35.0 | | |
| BR60DS6T-101.0 | 30 | | | | | | | | | 97.6 | 81.6 | 67.4 | 54.8 | 43.8 | 34.0 | 25.2 |
| | 40 | | | | | | | | | 95.6 | 80.0 | 66.0 | 53.8 | 42.8 | 32.8 | 23.6 |
| | 50 | | | | | | | | | 93.6 | 78.4 | 65.0 | 52.8 | 41.8 | | |
| BR60G4T-169.0 | 30 | 228.2 | 209.6 | 192.2 | 175.8 | 146.6 | 121.0 | 99.0 | 80.0 | 63.6 | 49.8 | 38.0 | | | | |
| | 40 | 206.4 | 189.4 | 173.6 | 158.8 | 132.0 | 108.8 | 88.6 | 71.2 | 56.4 | 43.8 | 33.0 | | | | |
| | 50 | 185.4 | 170.0 | 155.8 | 142.2 | 118.0 | 97.0 | 78.6 | 63.0 | 49.4 | 38.0 | | | | | |
| BR50Z4T-202.2 | 30 | | | | | | 144.6 | 118.3 | 95.6 | 76.0 | 59.5 | 45.4 | 33.2 | 23.2 | | |
| | 40 | | | | | | 130.1 | 105.9 | 85.1 | 67.4 | 51.6 | 38.5 | 27.3 | 17.9 | | |
| | 50 | | | | | | 116.0 | 94.0 | 75.3 | 58.3 | 44.2 | 32.3 | 22.2 | | | |
| BR70G4T-202.2 | 30 | 272.8 | 250.6 | 229.8 | 210.1 | 175.2 | 144.6 | 118.3 | 95.6 | 76.0 | 59.5 | 45.4 | | | | |
| | 40 | 246.7 | 226.4 | 207.5 | 189.8 | 157.8 | 130.1 | 105.9 | 85.1 | 67.4 | 52.4 | 39.4 | | | | |
| | 50 | 221.6 | 203.2 | 186.2 | 170.0 | 141.1 | 116.0 | 94.0 | 75.3 | 59.1 | 45.4 | | | | | |
| BR50Z6T-221 | 30 | | | | | | 156.9 | 128.2 | 103.4 | 82.1 | 63.9 | 49.2 | 36.0 | 24.9 | | |
| | 40 | | | | | | 140.6 | 114.4 | 91.7 | 72.2 | 55.5 | 41.5 | 29.4 | 19.3 | | |
| | 50 | | | | | | 125.2 | 101.2 | 80.5 | 62.7 | 47.4 | 34.5 | 23.7 | 14.9 | | |
| BR70G6T-221 | 30 | 298.3 | 273.8 | 251.0 | 229.7 | 191.3 | 157.9 | 129.0 | 104.1 | 82.6 | 64.3 | 48.8 | | | | |
| | 40 | 269.3 | 247.1 | 226.3 | 207.0 | 172.0 | 141.6 | 115.2 | 92.4 | 72.8 | 56.1 | 41.9 | | | | |
| | 50 | 241.8 | 221.7 | 202.9 | 185.3 | 153.6 | 125.9 | 101.9 | 81.2 | 63.3 | 48.1 | | | | | |
| BR60Z6T-253.6 | 30 | | | | | | 181.6 | 148.6 | 120.0 | 95.6 | 74.6 | 57.0 | 42.0 | 29.2 | | |
| | 40 | | | | | | 163.2 | 133.0 | 107.0 | 84.6 | 65.0 | 48.4 | 34.4 | 22.6 | | |
| | 50 | | | | | | 145.6 | 118.2 | 94.4 | 73.4 | 55.6 | 40.6 | 28.0 | | | |
| BR80G6T-253.6 | 30 | 342.4 | 314.4 | 288.2 | 263.8 | 219.8 | 181.6 | 148.6 | 120.0 | 95.6 | 74.6 | 57.0 | | | | |
| | 40 | 309.8 | 284.4 | 260.6 | 238.2 | 198.2 | 163.2 | 133.0 | 107.0 | 84.6 | 65.6 | 49.6 | | | | |
| | 50 | 278.2 | 255.2 | 233.6 | 213.6 | 177.2 | 145.6 | 118.2 | 94.4 | 74.2 | 57.0 | | | | | |
| BR80Z6T-303.2 | 30 | | | | | | 214.2 | 175.4 | 142.0 | 113.4 | 89.0 | 68.2 | 50.4 | 35.4 | | |
| | 40 | | | | | | 193.0 | 157.6 | 127.2 | 101.0 | 77.8 | 58.4 | 42.0 | 28.0 | | |
| | 50 | | | | | | 172.6 | 140.6 | 113.0 | 88.2 | 67.4 | 49.6 | 34.6 | | | |
| BR100G6T-303.2 | 30 | 402.2 | 369.4 | 339.0 | 310.4 | 258.8 | 214.2 | 175.4 | 142.0 | 113.4 | 89.0 | 68.4 | | | | |
| | 40 | 364.2 | 334.4 | 306.6 | 280.6 | 233.8 | 193.0 | 157.6 | 127.2 | 101.0 | 78.8 | 60.0 | | | | |
| | 50 | 327.8 | 300.8 | 275.6 | 252.0 | 209.6 | 172.6 | 140.6 | 113.0 | 89.4 | 69.2 | | | | | |

**说明**
***Remarks:***

1、 表示压缩机必须附加冷却或限制吸气温度；
The compressor should have chilling or restrict suction temperature.

2、 表示压缩机必须附加冷却+最大吸气过热度小于20度；
The compressor should have cooling and the maximum suction degree of superheat 20K.

3、 表示压缩机必须附加CIC系统。 The compressor should have CIC system.

4、当频率为60Hz时，制冷量增加20%。 When the frequency is 60 Hz, the increase of refrigerating capacity is 20%。

# R404A、R507A

基于吸气温度20℃，液体没有过冷，电机转速=1450转/分（50Hz）
Suction temperature 20℃, No liguid subcooling, Rotate speed of the motor is 1450 rpm (50Hz)

## 制冷量表
REFRIGERATION SCALE

| 型号 Model | 冷凝温度 Condensing temperature | 制冷量 $Q_0$（KW） Refrigerating capacity $Q_0$ (KW) 蒸发温度 ℃ Evaporating temperature ℃ | | | | | | | | | | | | | | | | |
|---|---|---|---|---|---|---|---|---|---|---|---|---|---|---|---|---|---|---|
| | | 7.5 | 5 | 0 | -5 | -10 | -15 | -20 | -25 | -30 | -35 | -40 | -45 | -50 | -55 | -60 | -65 | -70 |
| BF5G2-18.4E | 30 | 24.0 | 22.2 | 18.6 | 15.4 | 12.6 | 10.2 | 8.5 | 6.7 | 5.3 | 4.0 | 3.0 | | | | | | |
| | 40 | 20.4 | 18.9 | 15.8 | 13.1 | 10.7 | 8.7 | 7.2 | 5.7 | 4.5 | 3.4 | 2.6 | | | | | | |
| | 50 | | | 13.0 | 10.7 | 8.8 | 7.1 | 5.9 | 4.7 | 3.6 | 2.8 | 2.1 | | | | | | |
| BF8G2-26.8E | 30 | 31.4 | 28.7 | 24.0 | 20.0 | 16.4 | 13.4 | 10.7 | 8.5 | 6.5 | 4.9 | 3.7 | | | | | | |
| | 40 | 26.4 | 24.1 | 20.2 | 16.8 | 13.8 | 11.3 | 9.0 | 7.1 | 5.5 | 4.2 | 3.1 | | | | | | |
| | 50 | 21.6 | 19.8 | 16.6 | 13.8 | 11.4 | 9.1 | 7.4 | 5.8 | 4.5 | 3.5 | 2.6 | | | | | | |
| BF8Z2-36.0E | 30 | | | | 30.6 | 25.1 | 20.3 | 16.3 | 14.0 | 9.9 | 7.5 | 5.4 | | | | | | |
| | 40 | | | | 26.0 | 21.3 | 17.3 | 13.8 | 11.9 | 8.4 | 6.4 | 4.6 | | | | | | |
| | 50 | | | | 21.0 | 17.2 | 14.0 | 11.2 | 9.7 | 6.8 | 5.2 | 3.7 | | | | | | |
| BF10G2-36.0E | 30 | 44.8 | 44.2 | 35.1 | 29.0 | 23.9 | 19.4 | 15.6 | 12.3 | 9.5 | 7.2 | 5.3 | | | | | | |
| | 40 | 38.1 | 35.6 | 29.8 | 24.6 | 20.3 | 16.5 | 13.2 | 10.5 | 8.1 | 6.1 | 4.5 | | | | | | |
| | 50 | 30.1 | 28.8 | 24.1 | 19.9 | 16.4 | 13.4 | 10.7 | 8.5 | 6.6 | 4.9 | 3.6 | | | | | | |
| BF12Z3-54.0E | 30 | | | | 46.1 | 38.1 | 31.2 | 26.1 | 20.2 | 15.7 | 12.5 | 8.9 | | | | | | |
| | 40 | | | | 39.0 | 32.3 | 26.3 | 22.2 | 17.2 | 13.5 | 10.6 | 7.6 | | | | | | |
| | 50 | | | | 31.3 | 25.9 | 21.5 | 17.9 | 13.9 | 10.9 | 8.7 | 6.1 | | | | | | |
| BF15G3-54.0E | 30 | 69.0 | 64.5 | 54.3 | 45.2 | 37.3 | 30.5 | 25.6 | 19.6 | 15.3 | 11.7 | 8.9 | | | | | | |
| | 40 | 58.7 | 54.8 | 46.2 | 38.4 | 31.7 | 25.9 | 21.8 | 16.7 | 13.0 | 9.9 | 7.5 | | | | | | |
| | 50 | 47.5 | 44.4 | 37.4 | 31.1 | 25.7 | 21.0 | 17.6 | 13.5 | 10.5 | 8.1 | 6.1 | | | | | | |
| BR3Z4-18.1E | 30 | | | | 13.7 | 11.3 | 9.2 | 7.4 | 5.9 | 4.6 | 3.5 | 2.5 | 1.7 | | | | | |
| | 40 | | | | 11.5 | 9.5 | 7.7 | 6.2 | 4.8 | 3.7 | 2.7 | 1.9 | 1.3 | | | | | |
| | 50 | | | | 9.4 | 7.7 | 6.2 | 4.9 | 3.8 | 2.9 | 2.1 | 1.4 | | | | | | |
| BR5G4-18.1E | 30 | 21.5 | 19.7 | 16.5 | 13.8 | 11.4 | 9.3 | 7.5 | 5.9 | 4.6 | 3.5 | 2.5 | | | | | | |
| | 40 | 18.2 | 16.7 | 14.0 | 11.6 | 9.5 | 7.7 | 6.2 | 4.9 | 3.7 | 2.7 | 1.9 | | | | | | |
| | 50 | 14.9 | 13.7 | 11.4 | 9.5 | 7.7 | 6.2 | 4.9 | 3.8 | 2.9 | 2.0 | 1.4 | | | | | | |
| BR4Z4-22.7E | 30 | | | | 17.3 | 14.2 | 11.6 | 9.3 | 7.4 | 5.7 | 4.3 | 3.2 | 2.2 | | | | | |
| | 40 | | | | 14.4 | 11.8 | 9.6 | 7.7 | 6.0 | 4.6 | 3.4 | 2.4 | 1.5 | | | | | |
| | 50 | | | | 11.6 | 9.5 | 7.7 | 6.1 | 4.7 | 3.5 | 2.5 | 1.7 | | | | | | |
| BR6G4-22.7E | 30 | 27.4 | 25.2 | 21.1 | 17.5 | 14.4 | 11.8 | 9.5 | 7.5 | 5.8 | 4.4 | 3.2 | | | | | | |
| | 40 | 23.1 | 21.2 | 17.7 | 14.7 | 12.1 | 9.8 | 7.8 | 6.1 | 4.7 | 3.4 | 2.4 | | | | | | |
| | 50 | 18.9 | 17.3 | 14.4 | 11.9 | 9.7 | 7.8 | 6.2 | 4.8 | 3.6 | 2.5 | 1.7 | | | | | | |
| BR5Z4-26.8E | 30 | | | | 21.1 | 17.4 | 14.2 | 11.4 | 9.1 | 7.0 | 5.3 | 3.9 | 2.7 | | | | | |
| | 40 | | | | 17.6 | 14.5 | 11.8 | 9.4 | 7.4 | 5.7 | 4.2 | 3.0 | 1.9 | | | | | |
| | 50 | | | | 14.3 | 11.7 | 9.4 | 7.5 | 5.8 | 4.4 | 3.2 | 2.1 | | | | | | |
| BR7G4-26.8E | 30 | 32.5 | 29.8 | 25.0 | 20.7 | 17.1 | 13.9 | 11.2 | 8.8 | 6.8 | 5.1 | 3.7 | | | | | | |
| | 40 | 27.5 | 25.2 | 21.0 | 17.4 | 14.3 | 11.6 | 9.2 | 7.2 | 5.5 | 4.0 | 2.7 | | | | | | |
| | 50 | 22.5 | 20.6 | 17.2 | 14.2 | 11.6 | 9.3 | 7.3 | 5.6 | 4.2 | 3.0 | 1.9 | | | | | | |
| BR6Z4-32.5E | 30 | | | | 24.9 | 20.6 | 16.9 | 13.6 | 10.9 | 8.5 | 6.5 | 4.8 | 3.4 | | | | | |
| | 40 | | | | 21.1 | 17.4 | 14.2 | 11.4 | 9.0 | 6.9 | 5.2 | 3.7 | 2.5 | | | | | |
| | 50 | | | | 17.3 | 14.2 | 11.5 | 9.1 | 7.1 | 5.4 | 3.9 | 2.7 | | | | | | |
| BR9G4-32.5E | 30 | 38.8 | 35.6 | 29.9 | 24.9 | 20.6 | 16.8 | 13.6 | 10.8 | 8.5 | 6.5 | 4.8 | | | | | | |
| | 40 | 32.8 | 30.1 | 25.3 | 21.0 | 17.4 | 14.2 | 11.4 | 9.0 | 7.0 | 5.2 | 3.7 | | | | | | |
| | 50 | 27 | 24.8 | 20.8 | 17.3 | 14.3 | 11.6 | 9.2 | 7.2 | 5.4 | 3.9 | 2.6 | | | | | | |
| BR6Z4-34.7E | 30 | | | | 27.0 | 22.3 | 18.1 | 14.6 | 11.5 | 8.9 | 6.7 | 4.9 | 3.3 | | | | | |
| | 40 | | | | 22.7 | 18.6 | 15.1 | 12.0 | 9.4 | 7.2 | 5.3 | 3.7 | 2.3 | | | | | |
| | 50 | | | | | 14.9 | 12.0 | 9.5 | 7.3 | 5.5 | 3.9 | 2.6 | | | | | | |
| BR10G4-34.7E | 30 | 42.7 | 39.1 | 32.8 | 27.2 | 22.4 | 18.2 | 14.6 | 11.4 | 8.8 | 6.5 | 4.5 | | | | | | |
| | 40 | 36.1 | 33.0 | 27.6 | 22.8 | 18.6 | 15.0 | 11.9 | 9.2 | 6.9 | 5.0 | 3.3 | | | | | | |
| | 50 | 29.5 | 27.0 | 22.4 | 18.4 | 15.0 | 12.0 | 9.4 | 7.1 | 5.2 | 3.6 | 2.3 | | | | | | |
| BR8Z4-41.3E | 30 | | | | 33.0 | 27.2 | 22.2 | 17.8 | 14.1 | 10.9 | 8.3 | 6.0 | 4.1 | | | | | |
| | 40 | | | | 27.7 | 22.7 | 18.4 | 14.7 | 11.5 | 8.8 | 6.5 | 4.5 | 2.9 | | | | | |
| | 50 | | | | | 18.3 | 14.7 | 11.7 | 9.0 | 6.8 | 4.8 | 3.2 | | | | | | |
| BR12G4-41.3E | 30 | 51.4 | 47.1 | 39.4 | 32.7 | 26.9 | 21.8 | 17.5 | 13.8 | 10.6 | 7.9 | 5.6 | | | | | | |
| | 40 | 43.4 | 39.8 | 33.2 | 27.5 | 22.5 | 18.2 | 14.5 | 11.3 | 8.5 | 6.2 | 4.3 | | | | | | |
| | 50 | 35.3 | 32.4 | 27.0 | 22.3 | 18.2 | 14.6 | 11.5 | 8.8 | 6.5 | 4.6 | 3.0 | | | | | | |
| BR10Z4-48.5E | 30 | | | | 38.3 | 31.5 | 25.7 | 20.7 | 16.3 | 12.6 | 9.5 | 6.9 | 4.6 | | | | | |
| | 40 | | | | 32.2 | 26.5 | 21.4 | 17.1 | 13.4 | 10.2 | 7.5 | 5.2 | 3.3 | | | | | |
| | 50 | | | | | 21.4 | 17.2 | 13.6 | 10.5 | 7.8 | 5.6 | 3.7 | | | | | | |
| BR15G4-48.5E | 30 | 61.5 | 56.3 | 47.1 | 39.0 | 32.0 | 26.0 | 20.8 | 16.3 | 12.4 | 9.2 | 6.5 | | | | | | |
| | 40 | 52.2 | 47.8 | 39.9 | 33.0 | 27.0 | 21.8 | 17.3 | 13.4 | 10.1 | 7.3 | 5.0 | | | | | | |
| | 50 | 42.6 | 39.0 | 32.4 | 26.7 | 21.7 | 17.4 | 13.6 | 10.4 | 7.7 | 5.3 | 3.4 | | | | | | |

# R404A、R507A

基于吸气温度20℃，液体没有过冷，电机转速=1450转/分（50Hz）
Suction temperature 20℃, No liguid subcooling, Rotate speed of the motor is 1450 rpm (50Hz)

## 制冷量表
## REFRIGERATION SCALE

| 型号 Model | 冷凝温度 Condensing temperature | 制冷量 $Q_0$（KW） Refrigerating capacity $Q_0$ (KW) 蒸发温度 ℃ Evaporating temperature ℃ | | | | | | | | | | | | | | | | |
|---|---|---|---|---|---|---|---|---|---|---|---|---|---|---|---|---|---|---|
| | | 7.5 | 5 | 0 | -5 | -10 | -15 | -20 | -25 | -30 | -35 | -40 | -45 | -50 | -55 | -60 | -65 | -70 |
| BR12Z4-56.3E | 30 | | | | 44.0 | 36.2 | 29.5 | 23.7 | 18.8 | 14.5 | 10.9 | 7.9 | 5.4 | | | | | |
| | 40 | | | | 37.3 | 30.6 | 24.8 | 19.8 | 15.5 | 11.8 | 8.7 | 6.1 | 3.9 | | | | | |
| | 50 | | | | | 24.8 | 20.0 | 15.8 | 12.2 | 9.1 | 6.5 | 4.3 | | | | | | |
| BR20G4-56.3E | 30 | 70.9 | 65.0 | 54.4 | 45.2 | 37.2 | 30.2 | 24.2 | 19.0 | 14.6 | 10.8 | 7.6 | | | | | | |
| | 40 | 60.5 | 55.4 | 46.2 | 38.2 | 31.2 | 25.2 | 20.0 | 15.5 | 11.7 | 8.5 | 5.8 | | | | | | |
| | 50 | 49.9 | 45.6 | 37.8 | 31.1 | 25.2 | 20.1 | 15.7 | 12.0 | 8.8 | 6.1 | 3.9 | | | | | | |
| BR13Z4-63.5E | 30 | | | | 50.3 | 41.5 | 33.9 | 27.4 | 21.7 | 16.9 | 12.8 | 9.4 | 6.6 | | | | | |
| | 40 | | | | 42.8 | 35.3 | 28.7 | 23.0 | 18.2 | 14.0 | 10.5 | 7.5 | 5.0 | | | | | |
| | 50 | | | | | 29.1 | 23.6 | 18.8 | 14.7 | 11.2 | 8.3 | 5.8 | | | | | | |
| BR20G4-63.5E | 30 | 77.5 | 71.1 | 59.5 | 49.5 | 40.8 | 33.4 | 27.0 | 21.5 | 16.8 | 12.9 | 9.6 | | | | | | |
| | 40 | 67.2 | 61.6 | 51.6 | 42.8 | 35.2 | 28.7 | 23.1 | 18.2 | 14.2 | 10.6 | 7.8 | | | | | | |
| | 50 | 56.0 | 51.4 | 43.0 | 35.7 | 29.3 | 23.7 | 19.0 | 14.9 | 11.4 | 8.5 | 6.0 | | | | | | |
| BR15Z4-73.6E | 30 | | | | 58.5 | 48.6 | 39.9 | 32.5 | 26.1 | 20.6 | 15.8 | 11.8 | 8.4 | | | | | |
| | 40 | | | | 50.8 | 42.0 | 34.4 | 27.8 | 22.1 | 17.2 | 13.1 | 9.5 | 6.6 | | | | | |
| | 50 | | | | | 34.8 | 28.4 | 22.8 | 17.9 | 13.8 | 10.3 | 7.3 | | | | | | |
| BR25G4-73.6E | 30 | 89.7 | 82.3 | 68.9 | 57.3 | 47.3 | 38.7 | 31.3 | 24.9 | 19.5 | 14.9 | 11.1 | | | | | | |
| | 40 | 77.8 | 71.3 | 59.7 | 49.6 | 40.8 | 33.2 | 26.7 | 21.1 | 16.4 | 12.3 | 9.0 | | | | | | |
| | 50 | 64.9 | 59.5 | 49.8 | 41.3 | 33.9 | 27.5 | 22.0 | 17.2 | 13.2 | 9.8 | 6.9 | | | | | | |
| BR20Z4-84.5E | 30 | | | | 67.2 | 55.8 | 45.9 | 37.4 | 30.0 | 23.7 | 18.3 | 13.7 | 9.9 | | | | | |
| | 40 | | | | 58.3 | 48.3 | 39.6 | 32.0 | 25.5 | 20.0 | 15.2 | 11.2 | 7.8 | | | | | |
| | 50 | | | | | 40.1 | 32.7 | 26.3 | 20.8 | 16.0 | 12.0 | 8.6 | | | | | | |
| BR30G4-84.5E | 30 | 102.8 | 94.3 | 79.0 | 65.8 | 54.3 | 44.5 | 36.0 | 28.7 | 22.5 | 17.3 | 12.9 | | | | | | |
| | 40 | 89.3 | 81.9 | 69.5 | 56.9 | 46.9 | 38.2 | 30.8 | 24.4 | 18.9 | 14.3 | 10.5 | | | | | | |
| | 50 | 74.5 | 68.3 | 57.2 | 47.5 | 39.0 | 31.7 | 25.4 | 19.9 | 15.3 | 11.4 | 8.1 | | | | | | |
| BR25Z4-101.1E | 30 | | | | 80.3 | 66.7 | 54.9 | 44.7 | 35.9 | 28.3 | 21.9 | 16.4 | 11.8 | | | | | |
| | 40 | | | | 69.7 | 57.7 | 47.3 | 38.3 | 30.5 | 23.9 | 18.2 | 13.4 | 9.3 | | | | | |
| | 50 | | | | | 47.9 | 39.1 | 31.4 | 24.9 | 19.1 | 14.3 | 10.3 | | | | | | |
| BR35G4-101.1E | 30 | 122.9 | 112.7 | 94.4 | 78.7 | 64.9 | 53.2 | 43.0 | 34.3 | 26.9 | 20.7 | 15.4 | | | | | | |
| | 40 | 106.7 | 97.9 | 81.9 | 68.0 | 56.1 | 45.7 | 36.8 | 29.2 | 22.6 | 17.1 | 12.6 | | | | | | |
| | 50 | 89.1 | 81.6 | 68.4 | 56.8 | 46.6 | 37.9 | 30.4 | 23.8 | 18.3 | 13.6 | 9.7 | | | | | | |
| BR22Z6-95.3E | 30 | | | | 74.3 | 61.3 | 50.1 | 40.5 | 32.2 | 25.2 | 19.1 | 14.1 | 9.9 | | | | | |
| | 40 | | | | 63.8 | 52.6 | 42.8 | 34.4 | 27.1 | 20.9 | 15.6 | 11.2 | 7.5 | | | | | |
| | 50 | | | | | 43.7 | 35.4 | 28.2 | 22.0 | 16.7 | 12.3 | 8.5 | | | | | | |
| BR33G6-95.3E | 30 | 118.8 | 108.9 | 91.1 | 75.6 | 62.2 | 50.5 | 40.5 | 31.9 | 24.5 | 18.3 | 13.0 | | | | | | |
| | 40 | 101.5 | 93.0 | 77.7 | 64.3 | 52.7 | 42.6 | 33.9 | 26.4 | 20.1 | 14.6 | 10.1 | | | | | | |
| | 50 | 84.4 | 77.4 | 64.6 | 53.3 | 43.6 | 35.1 | 27.7 | 21.4 | 16.0 | 11.5 | 7.7 | | | | | | |
| BR25Z6-110.5E | 30 | | | | 87.9 | 7.3 | 59.3 | 47.8 | 39.0 | 29.7 | 22.7 | 16.7 | 11.9 | | | | | |
| | 40 | | | | 74.7 | 61.6 | 50.2 | 40.4 | 31.9 | 24.7 | 18.6 | 13.4 | 9.1 | | | | | |
| | 50 | | | | | 50.5 | 41.2 | 33.0 | 26.0 | 19.9 | 14.8 | 10.4 | | | | | | |
| BR35G6-110.5E | 30 | 136.0 | 124.8 | 104.5 | 86.9 | 71.0 | 58.4 | 47.0 | 37.2 | 28.8 | 21.7 | 15.7 | | | | | | |
| | 40 | 116.3 | 106.6 | 89.3 | 74.1 | 60.9 | 49.5 | 39.6 | 31.1 | 23.8 | 17.7 | 12.5 | | | | | | |
| | 50 | 96.6 | 88.6 | 74.1 | 61.4 | 50.4 | 40.7 | 32.4 | 25.3 | 19.2 | 14.0 | 9.7 | | | | | | |
| BR30Z6-126.8E | 30 | | | | 100.8 | 83.7 | 68.8 | 56.0 | 45.0 | 35.6 | 27.5 | 20.6 | 14.8 | | | | | |
| | 40 | | | | 87.6 | 72.4 | 59.3 | 48.0 | 38.3 | 29.9 | 22.8 | 16.7 | 11.6 | | | | | |
| | 50 | | | | | 60.2 | 49.1 | 39.6 | 31.2 | 24.1 | 18.0 | 12.8 | | | | | | |
| BR40G6-126.8E | 30 | 154.3 | 141.5 | 118.6 | 98.7 | 81.5 | 66.7 | 54.0 | 43.1 | 33.8 | 26.0 | 19.3 | | | | | | |
| | 40 | 134.0 | 122.9 | 102.8 | 85.4 | 70.4 | 57.4 | 46.2 | 36.6 | 28.4 | 21.5 | 15.7 | | | | | | |
| | 50 | 111.8 | 102.5 | 85.8 | 71.2 | 58.5 | 47.5 | 38.1 | 30.0 | 23.0 | 17.1 | 12.2 | | | | | | |
| BR40Z6-151.6E | 30 | | | | 120.6 | 100.0 | 82.2 | 66.8 | 53.6 | 42.3 | 32.6 | 24.4 | 17.4 | | | | | |
| | 40 | | | | 104.6 | 86.5 | 70.8 | 57.2 | 45.5 | 35.5 | 26.9 | 19.7 | 13.5 | | | | | |
| | 50 | | | | | 71.7 | 58.4 | 46.9 | 37.0 | 28.4 | 21.2 | 15.0 | | | | | | |
| BR50G6-151.6E | 30 | 184.8 | 169.4 | 141.9 | 118.1 | 97.4 | 79.7 | 64.4 | 51.3 | 40.2 | 30.8 | 22.9 | | | | | | |
| | 40 | 160.3 | 147.0 | 122.9 | 102.1 | 84.0 | 68.4 | 55.0 | 43.5 | 33.7 | 25.4 | 18.8 | | | | | | |
| | 50 | 133.6 | 122.5 | 102.4 | 84.9 | 69.7 | 56.6 | 45.2 | 35.5 | 27.2 | 20.1 | 14.2 | | | | | | |

**说明 Remarks:**

1、 表示压缩机必须附加冷却或限制吸气温度； The compressor should have chilling or restrict suction temperature.

2、当频率为60Hz时，制冷量增加20%。 When the frequency is 60 Hz, the increase of refrigerating capacity is 20%。

# R404A、R507A

基于吸气温度20℃，液体没有过冷，电机转速=1450转/分（50Hz）
Suction temperature 20℃, No liguid subcooling, Rotate speed of the motor is 1450 rpm (50Hz)

## 制冷量表
## REFRIGERATION SCALE

| 型号 Model | 冷凝温度 Condensing temperature | 制冷量 $Q_0$（KW） Refrigerating capacity $Q_0$ (KW) 蒸发温度 ℃ Evaporating temperature ℃ | | | | | | | | | | | | | | | | |
|---|---|---|---|---|---|---|---|---|---|---|---|---|---|---|---|---|---|---|
| | | 7.5 | 5 | 0 | -5 | -10 | -15 | -20 | -25 | -30 | -35 | -40 | -45 | -50 | -55 | -60 | -65 | -70 |
| BR5DS4-10.3E | 30 | | | | | | | | 7.5 | 6.3 | 5.2 | 4.2 | 3.4 | 2.6 | 2.1 | 1.6 | 1.2 | 0.7 |
| | 40 | | | | | | | | 7.3 | 6.0 | 5.0 | 4.0 | 3.2 | 2.6 | 2.0 | 1.5 | 1.1 | |
| | 50 | | | | | | | | 6.9 | 5.8 | 4.8 | 3.9 | 3.1 | 2.5 | 1.9 | | | |
| BR8DS4-17.9E | 30 | | | | | | | | 12.9 | 10.8 | 8.9 | 7.3 | 5.9 | 4.6 | 3.6 | 2.7 | 2.0 | 1.3 |
| | 40 | | | | | | | | 12.4 | 10.4 | 8.6 | 7.0 | 5.6 | 4.4 | 3.4 | 2.6 | 1.8 | |
| | 50 | | | | | | | | 11.9 | 10.0 | 8.3 | 6.7 | 5.4 | 4.3 | 3.3 | | | |
| BR12DS4-27.0E | 30 | | | | | | | | 19.4 | 16.8 | 14.2 | 11.8 | 9.6 | 7.6 | 5.9 | 4.5 | 3.4 | 2.4 |
| | 40 | | | | | | | | 18.9 | 16.2 | 13.6 | 11.3 | 9.2 | 7.3 | 5.7 | 4.3 | 3.2 | |
| | 50 | | | | | | | | 18.0 | 15.4 | 13.0 | 10.8 | 8.8 | 7.0 | 5.5 | | | |
| BR16DS6-31.8E | 30 | | | | | | | | 27.5 | 23.7 | 20.1 | 16.7 | 13.7 | 11.0 | 8.6 | 6.6 | 4.9 | 3.6 |
| | 40 | | | | | | | | 26.5 | 22.8 | 19.3 | 16.0 | 13.1 | 10.5 | 8.3 | 6.4 | 4.7 | |
| | 50 | | | | | | | | 25.4 | 21.8 | 18.5 | 15.4 | 12.6 | 10.1 | 8.0 | | | |
| BR20DS6-36.8E | 30 | | | | | | | | 31.6 | 27.2 | 23.2 | 19.3 | 15.8 | 12.7 | 10.0 | 7.6 | 5.8 | 4.2 |
| | 40 | | | | | | | | 30.2 | 26.0 | 22.1 | 18.4 | 15.1 | 12.2 | 9.6 | 7.4 | 5.5 | |
| | 50 | | | | | | | | 28.8 | 24.8 | 21.0 | 17.5 | 14.5 | 11.7 | 9.2 | | | |
| BR25DS6-42.3E | 30 | | | | | | | | 36.2 | 31.3 | 26.6 | 22.3 | 18.2 | 14.6 | 11.5 | 8.8 | 6.6 | 4.9 |
| | 40 | | | | | | | | 34.9 | 30.1 | 25.5 | 21.3 | 17.4 | 14.0 | 11.0 | 8.5 | 6.4 | |
| | 50 | | | | | | | | 33.5 | 28.6 | 24.4 | 20.4 | 16.7 | 13.5 | 10.6 | | | |
| BR30DS6-50.5E | 30 | | | | | | | | 43.4 | 37.4 | 31.8 | 26.5 | 21.7 | 17.4 | 13.7 | 10.5 | 7.9 | 5.8 |
| | 40 | | | | | | | | 41.5 | 35.7 | 30.3 | 25.3 | 20.7 | 16.7 | 13.2 | 10.2 | 7.6 | |
| | 50 | | | | | | | | 39.5 | 34.0 | 28.9 | 24.1 | 19.9 | 16.1 | 12.7 | | | |
| BR40DS6T-73.6E | 30 | | | | | | | | 63.2 | 54.5 | 46.3 | 38.6 | 31.6 | 25.3 | 19.9 | 15.3 | 11.5 | 8.4 |
| | 40 | | | | | | | | 60.4 | 52.0 | 44.1 | 36.8 | 30.1 | 24.3 | 19.2 | 14.9 | 11.1 | |
| | 50 | | | | | | | | 57.5 | 49.5 | 42.1 | 35.1 | 29.0 | 23.4 | 18.5 | | | |
| BR50DS6T-84.6E | 30 | | | | | | | | 72.4 | 62.6 | 53.2 | 44.6 | 36.4 | 29.2 | 23.0 | 17.6 | 13.2 | 9.8 |
| | 40 | | | | | | | | 69.8 | 60.2 | 51.0 | 42.6 | 34.8 | 28.0 | 22.0 | 17.0 | 12.8 | |
| | 50 | | | | | | | | 67.0 | 57.2 | 48.8 | 40.8 | 33.4 | 27.0 | 21.2 | | | |
| BR60DS6T-101.0E | 30 | | | | | | | | 86.8 | 74.8 | 63.6 | 53.0 | 43.4 | 34.8 | 27.4 | 21.0 | 15.8 | 11.6 |
| | 40 | | | | | | | | 83.0 | 71.4 | 60.6 | 50.6 | 41.4 | 33.4 | 26.4 | 20.4 | 15.2 | |
| | 50 | | | | | | | | 79.0 | 68.0 | 57.8 | 48.2 | 39.8 | 32.2 | 25.4 | | | |
| BR60G4T-169.0E | 30 | 205.6 | 188.6 | 158.0 | 131.6 | 108.6 | 89.0 | 72.0 | 57.4 | 45.0 | 34.6 | 25.8 | | | | | | |
| | 40 | 178.6 | 163.8 | 137.0 | 113.8 | 93.8 | 76.4 | 61.6 | 48.8 | 37.8 | 28.6 | 21.0 | | | | | | |
| | 50 | 149.0 | 136.6 | 114.4 | 95.0 | 78.0 | 63.4 | 50.8 | 39.8 | 30.6 | 22.8 | 16.2 | | | | | | |
| BR50Z4T-202.2E | 30 | | | | 160.7 | 133.4 | 109.7 | 89.4 | 71.7 | 56.7 | 43.8 | 32.8 | 23.7 | | | | | |
| | 40 | | | | 139.4 | 115.5 | 94.7 | 76.5 | 61.0 | 47.8 | 36.3 | 26.8 | 18.6 | | | | | |
| | 50 | | | | | 95.9 | 78.2 | 62.9 | 49.7 | 38.3 | 28.7 | 20.6 | | | | | | |
| BR70G4T-202.2E | 30 | 245.8 | 225.4 | 188.9 | 157.3 | 129.8 | 106.4 | 86.1 | 68.6 | 53.8 | 41.4 | 30.8 | | | | | | |
| | 40 | 213.5 | 195.8 | 163.8 | 136.0 | 112.1 | 91.3 | 73.6 | 58.3 | 45.2 | 34.2 | 25.1 | | | | | | |
| | 50 | 178.1 | 163.3 | 136.8 | 113.6 | 93.2 | 75.8 | 60.7 | 47.6 | 36.6 | 27.3 | 19.4 | | | | | | |
| BR50Z6T-221E | 30 | | | | 175.8 | 145.0 | 118.6 | 95.6 | 76.0 | 59.4 | 45.3 | 33.5 | 23.7 | | | | | |
| | 40 | | | | 149.4 | 123.2 | 100.4 | 80.8 | 63.8 | 49.4 | 37.2 | 26.9 | 18.3 | | | | | |
| | 50 | | | | | 101.0 | 82.3 | 66 | 51.9 | 39.9 | 29.5 | 20.8 | | | | | | |
| BR70G6T-221E | 30 | 272.0 | 249.6 | 209.0 | 173.8 | 143.2 | 116.8 | 94.0 | 74.4 | 57.6 | 43.4 | 31.5 | | | | | | |
| | 40 | 232.6 | 213.2 | 178.6 | 148.2 | 121.8 | 98.9 | 79.2 | 62.2 | 47.6 | 35.4 | 25.0 | | | | | | |
| | 50 | 193.2 | 177.2 | 148.2 | 122.8 | 100.8 | 81.4 | 64.8 | 50.5 | 38.3 | 28.0 | 19.3 | | | | | | |
| BR60Z6T-253.6E | 30 | | | | 201.6 | 167.4 | 137.6 | 112.0 | 90.0 | 71.2 | 55.0 | 41.2 | 29.6 | | | | | |
| | 40 | | | | 175.2 | 144.8 | 118.6 | 96.0 | 76.6 | 59.8 | 45.6 | 33.4 | 23.2 | | | | | |
| | 50 | | | | | 120.4 | 98.2 | 79.2 | 62.4 | 48.2 | 36.0 | 25.6 | | | | | | |
| BR80G6T-253.6E | 30 | 308.6 | 283.0 | 237.2 | 197.4 | 163.0 | 133.4 | 108.0 | 86.2 | 67.6 | 52.0 | 38.6 | | | | | | |
| | 40 | 268.0 | 245.8 | 205.6 | 170.8 | 140.8 | 114.8 | 92.4 | 73.2 | 56.8 | 43.0 | 31.4 | | | | | | |
| | 50 | 223.6 | 205.0 | 171.6 | 142.4 | 117.0 | 95.0 | 76.2 | 60.0 | 46.0 | 34.2 | 24.4 | | | | | | |
| BR80Z6T-303.2E | 30 | | | | 241.2 | 200.0 | 164.4 | 133.6 | 107.2 | 84.6 | 65.2 | 48.8 | 34.8 | | | | | |
| | 40 | | | | 209.2 | 173.0 | 141.6 | 114.4 | 91.0 | 71.0 | 53.8 | 39.4 | 27.0 | | | | | |
| | 50 | | | | | 143.4 | 116.8 | 93.8 | 74.0 | 56.8 | 42.4 | 30.0 | | | | | | |
| BR100G6T-303.2E | 30 | 369.6 | 338.8 | 283.8 | 236.2 | 194.8 | 159.4 | 128.8 | 102.6 | 80.4 | 61.6 | 45.8 | | | | | | |
| | 40 | 320.6 | 294.0 | 245.8 | 2 04.2 | 168.0 | 136.8 | 110.0 | 87.0 | 67.4 | 50.8 | 37.6 | | | | | | |
| | 50 | 267.2 | 245.0 | 204.8 | 169.8 | 139.4 | 113.2 | 90.4 | 71.0 | 54.4 | 40.2 | 28.4 | | | | | | |

## 外形图
OUTLINE DRAWING

**BF5G2-18.4、BF8G2-26.8、BF8Z2-36.0、BF10G2-36.0、BF12Z3-54.0、BF15G3-54.0**

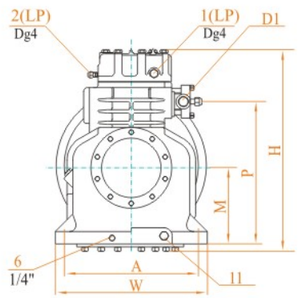


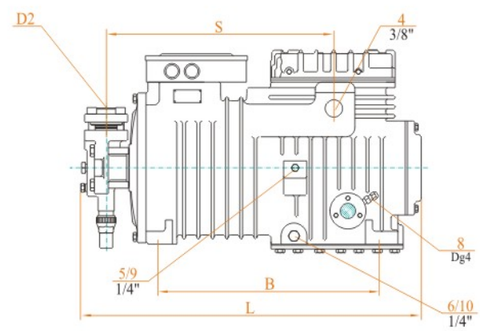


图示尺寸标注说明（单位：mm）
Explanation of Dimension marking in the drawing

| 型号 Model | A | B | D1 | D2 | H | L | M | P | S | W |
|---|---|---|---|---|---|---|---|---|---|---|
| BF5G2-18.4 | 260 | 355 | 19.5 | 25.9 | 395 | 542 | 130 | 240 | 371 | 310 |
| BF8G2-26.8、BF8Z2-36.0 | 280 | 380 | 25.4 | 31.7 | 448 | 585 | 160 | 297 | 390 | 330 |
| BF10G2-36.0 | 280 | 380 | 25.4 | 31.7 | 448 | 585 | 160 | 297 | 390 | 330 |
| BF12Z3-54.0、BF15G3-54.0 | 315 | 480 | 28.0 | 38.1 | 430 | 745 | 160 | 292 | 470 | 366 |

**BR3Z4-18.1、BR5G4-18.1、BR4Z4-22.7、BR6G4-22.7、BR5Z4-26.8**

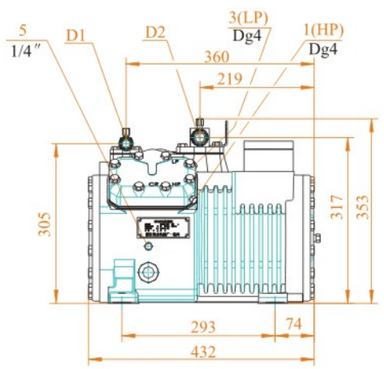


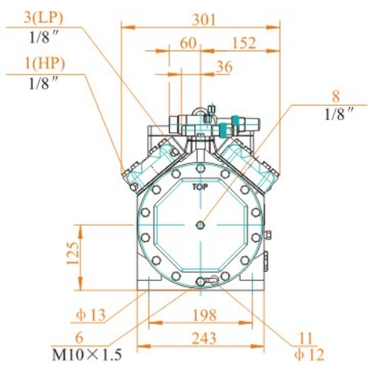


吸、排气阀接管 Aspirator, exhaust valve take-over

| 型号 MNodel | BR3Z4-18.1 | BR5G4-18.1 | BR4Z4-22.7 | BR6G4-22.7 | BR5Z4-26.8 |
|---|---|---|---|---|---|
| D1 mm | ϕ16(5/8″) | ϕ16(5/8″) | ϕ16(5/8″) | ϕ16(5/8″) | ϕ22(7/8″) |
| D2 mm | ϕ22(7/8″) | ϕ22(7/8″) | ϕ28(1 1/8″) | ϕ28(1 1/8″) | ϕ28(1 1/8″) |

图示接管位置说明见P19 Instruction of the take –over station as drawing please see page 19

## 外形图
OUTLINE DRAWING

**BR7G4-26.8、BR6Z4-32.5、BR9G4-32.5**

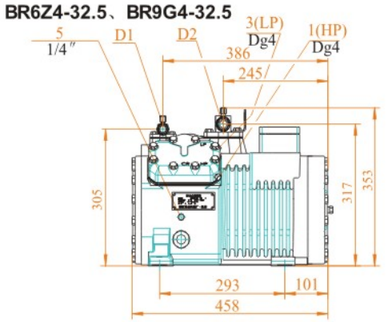


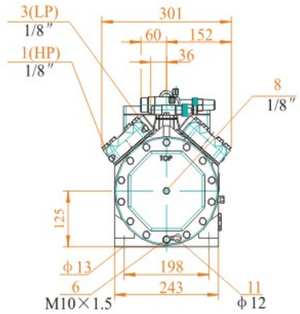


吸、排气阀接管 Aspirator, exhaust valve take-over

| 型号 Model | BR7G4-26.8 | BR6Z4-32.5 | BR9G4-32.5 |
|---|---|---|---|
| D1 mm | ϕ22(7/8″) | ϕ22(7/8″) | ϕ22(7/8″) |
| D2 mm | ϕ28(1 1/8″) | ϕ28(1 1/8″) | ϕ28(1 1/8″) |

**BR6Z4-34.7、BR10G4-34.7、BR8Z4-41.3、BR12G4-41.3、BR10Z4-48.5、BR12Z4-56.3**

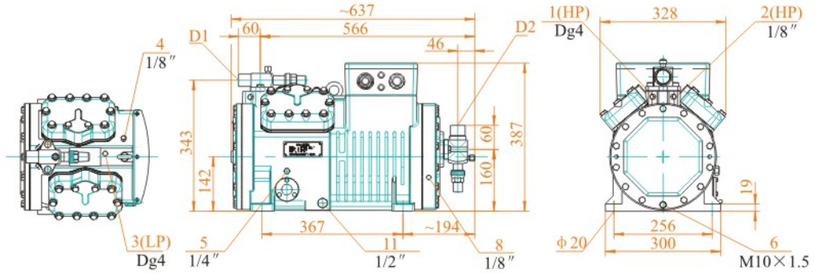


**BR15G4-48.5、BR20G4-56.3**

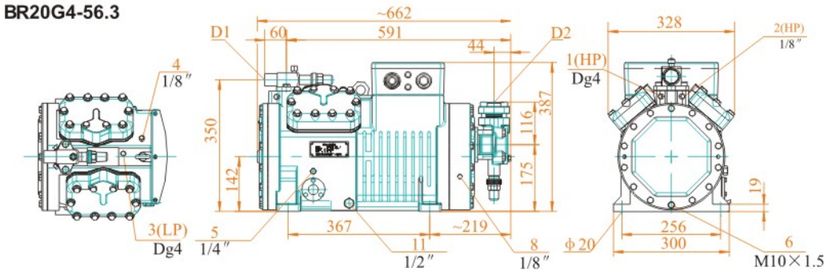


吸、排气阀接管 Aspirator, exhaust valve take-over

| 型号 Model | BR6Z4-34.7 | BR10G4-34.7 | BR8Z4-41.3 | BR12G4-41.3 | BR10Z4-48.5 | BR12Z4-56.3 | BR15G4-48.5 | BR20G4-56.3 |
|---|---|---|---|---|---|---|---|---|
| D1 mm | ϕ22(7/8″) | ϕ22(7/8″) | ϕ28(1 1/8″) | ϕ28(1 1/8″) | ϕ28(1 1/8″) | ϕ28(1 1/8″) | ϕ28(1 1/8″) | ϕ28(1 1/8″) |
| D2 mm | ϕ28(1 1/8″) | ϕ28(1 1/8″) | ϕ35(1 3/8″) | ϕ35(1 3/8″) | ϕ35(1 3/8″) | ϕ35(1 3/8″) | ϕ42(1 5/8″) | ϕ42(1 5/8″) |

图示接管位置说明见P19 Instruction of the take-over station as drawing please see page19

## 外形图
OUTLINE DRAWING

**BR13Z4-63.5、BR20G4-63.5、BR15Z4-73.6、BR25G4-73.6、BR20Z4-84.5、BR30G4-84.5、BR25Z4-101.1、BR35G4-101.1**

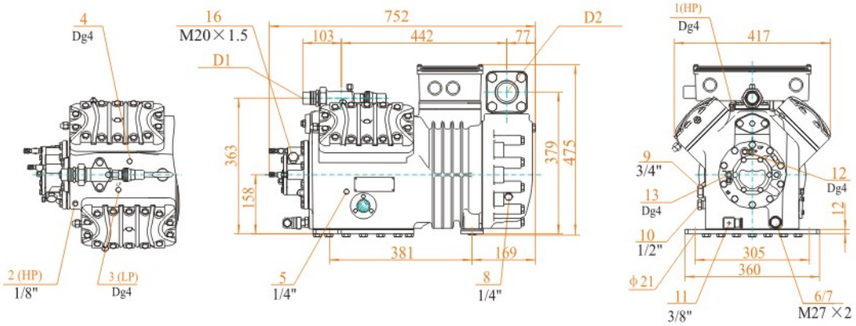


吸、排气阀接管 Aspirator, exhaust valve take-over

| 型号 Model | BR13Z4-63.5 | BR20G4-63.5 | BR15Z4-73.6 | BR25G4-73.6 | BR20Z4-84.5 | BR30G4-84.5 | BR25Z4-101.1 | BR35G4-101.1 |
|---|---|---|---|---|---|---|---|---|
| D1 mm | ϕ28(1 1/8″) | ϕ28(1 1/8″) | ϕ28(1 1/8″) | ϕ28(1 1/8″) | ϕ28(1 1/8″) | ϕ28(1 1/8″) | ϕ28(1 1/8″) | ϕ28(1 1/8″) |
| D2 mm | ϕ42(1 5/8″) | ϕ42(1 5/8″) | ϕ42(1 5/8″) | ϕ54(2 1/8″) | ϕ54(2 1/8″) | ϕ54(2 1/8″) | ϕ54(2 1/8″) | ϕ54(2 1/8″) |

**BR22Z6-95.3、BR33G6-95.3、BR25Z6-110.5、BR35G6-110.5、BR30Z6-126.8、BR40G6-126.8**

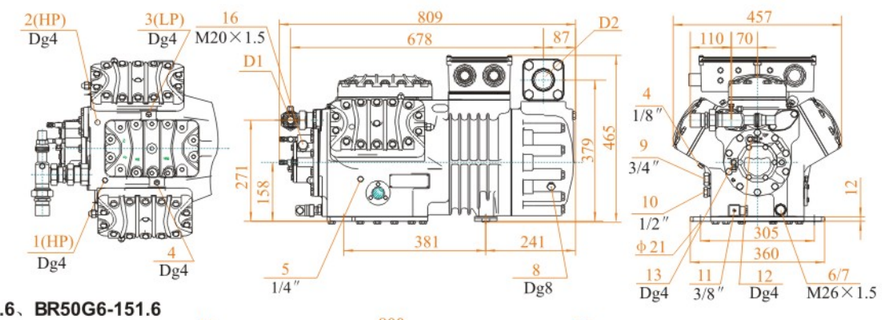


**BR40Z6-151.6、BR50G6-151.6**

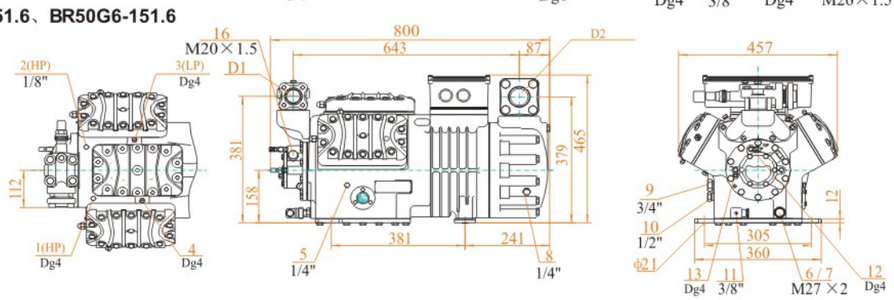


吸、排气阀接管 Aspirator, exhaust valve take-over

| 型号 Model | BR22Z6-95.3 | BR33G6-95.3 | BR25Z6-110.5 | BR35G6-110.5 | BR30Z6-126.8 | BR40G6-126.8 | BR40Z6-151.6 | BR50G6-151.6 |
|---|---|---|---|---|---|---|---|---|
| D1 mm | ϕ35(1 3/8″) | ϕ35(1 3/8″) | ϕ35(1 3/8″) | ϕ35(1 3/8″) | ϕ35(1 3/8″) | ϕ35(1 3/8″) | ϕ42(1 5/8″) | ϕ42(1 5/8″) |
| D2 mm | ϕ54(2 1/8″) | ϕ54(2 1/8″) | ϕ54(2 1/8″) | ϕ54(2 1/8″) | ϕ54(2 1/8″) | ϕ54(2 1/8″) | ϕ54(2 1/8″) | ϕ54(2 1/8″) |

图示接管位置说明见P19 Instruction of the take-over station as drawing please see page 19

## 外形图
OUTLINE DRAWING

**BR5DS4-10.3**

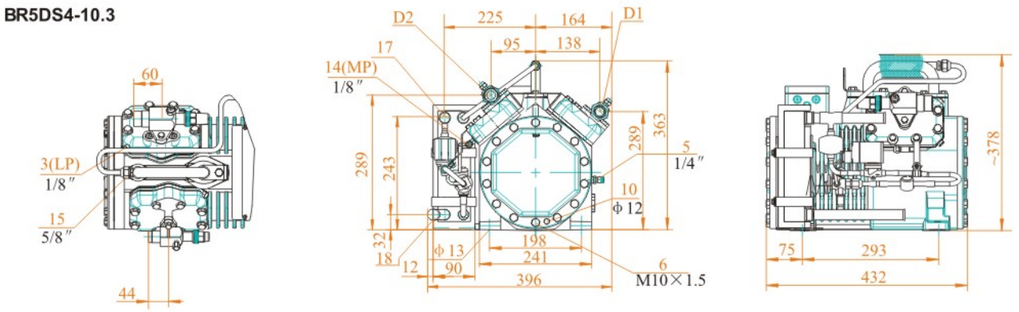


**BR8DS4-17.9**

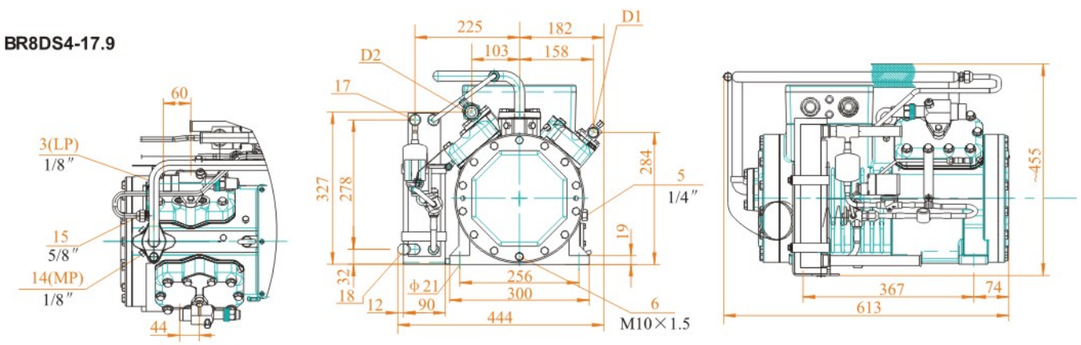


**BR12DS4-27.0**

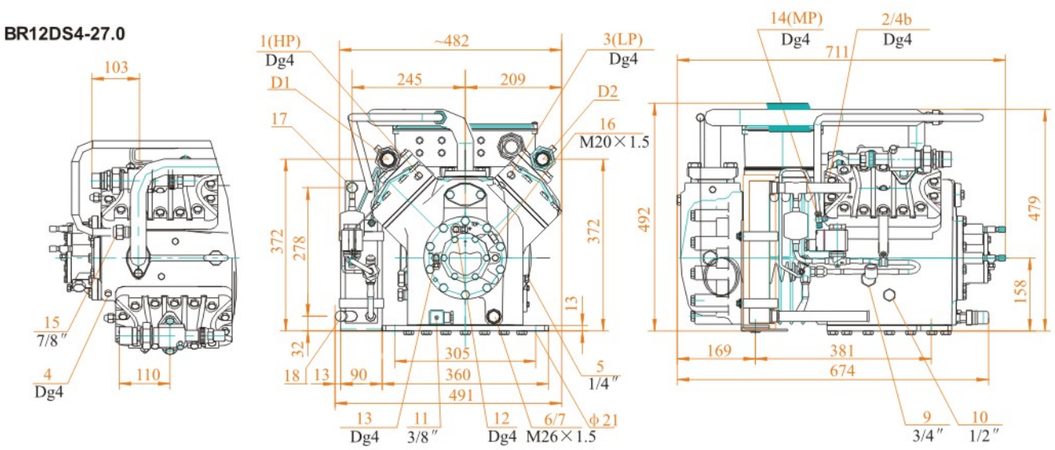


吸、排气阀接管 Aspirator, exhaust valve take-over

| 型号 Model | BR5DS4-10.3 | BR8DS4-17.9 | BR12DS4-27.0 |
|---|---|---|---|
| D1 mm | ϕ22（7/8"） | ϕ22（7/8"） | ϕ28（1 1/8"） |
| D2 mm | ϕ28（1 1/8"） | ϕ28（1 1/8"） | ϕ35（1 3/8"） |

图示接管位置说明见P19 Instruction of the take-over station as drawing please see page 19

## 外形图
OUTLINE DRAWING

**BR16DS6-31.8、BR20DS6-36.8、BR25DS6-42.3、BR30DS6-50.5**

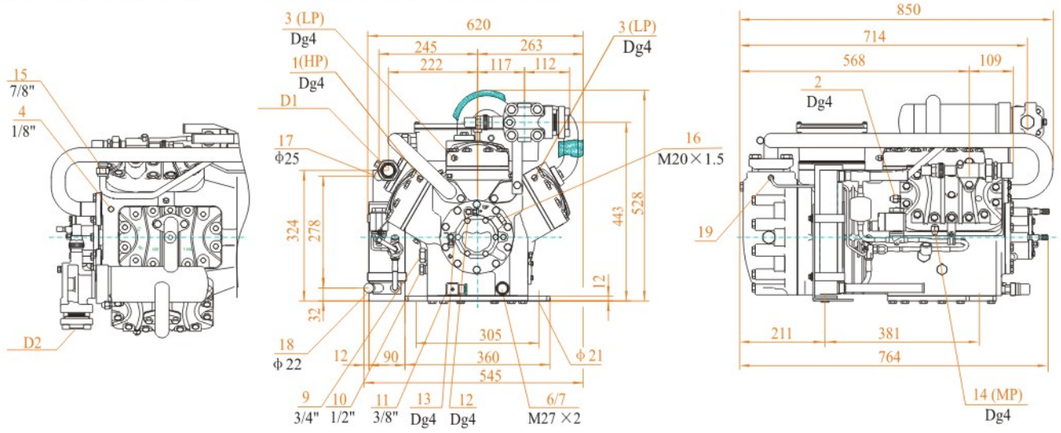


吸、排气阀接管 Aspirator, exhaust valve take-over

| 型号 Model | BR16DS6-31.8 | BR20DS6-36.8 | BR25DS6-42.3 | BR30DS6-50.5 |
|---|---|---|---|---|
| D1 mm | ϕ35(1 3/8″) | ϕ35(1 3/8″) | ϕ35(1 3/8″) | ϕ35(1 3/8″) |
| D2 mm | ϕ42(1 5/8″) | ϕ42(1 5/8″) | ϕ42(1 5/8″) | ϕ42(1 5/8″) |

## 图示接管位置说明 Explanation of pipes location in the drawing

1、高压接口(HP)
2、排气温度探头接口(HP)
3、低压接口(LP)
4、CIC系统：喷嘴接口(不带液体过冷器运行)
5、加油堵
6、放油口
7、油过滤器(带磁螺栓)
8、回油口(接油分离器)
9、气平衡接口(并联运行)
10、油平衡接口(并联运行)
11、曲轴箱加热器
12、油压高压接口＋
13、油压低压接口－
14、中间压力接口(MP)
15、喷液口(不带液体过冷器、热力膨胀阀运行)
16、油压差开关"Delta-P"连接
17、液体过冷器制冷剂入口
18、液体过冷器制冷剂出口
19、热力膨胀阀外平衡管接口(带液体过冷器运行)
D1、排气阀接口
D2、吸气阀接口

1. High pressure connection (HP)
2. Discharge gas temperature sensor(HP)
3. Low pressure connection (LP)
4. CIC system: spray nozzle(operation without liquid subcooler)
5. Oil fill plug
6. Oil drain
7. Oil filter (magnetic screw)
8. Oil return (oil separator)
9. Gas equalization (parallel operation)
10. Oil equalization (parallel operation)
11. Crankcase heater
12. Oil pressure high connection ＋
13. Oil pressure low connection －
14. Intermediate pressure connection (MP)
15. Liquid injection (operation without liquid subcooler and with thermostatic expansion valve)
16. Connection for differential oil pressure switch "Delta-P"
17. Refrigerant inlet at liquid subcooler
18. Refrigerant outlet at liquid subcooler
19. Thermostatic expansion valve of outside balace pipe connection (operation with liquid subcooler)
D1. Discharge valve connection
D2. Suction valve connection

一流品质 铸就精品
雪鹰半封闭制冷压缩机
强劲制冷动力“芯”

# Quality Assurance
# 品质保证

压缩机总装计算机在线检测
Compressor general assembly-line computer testing

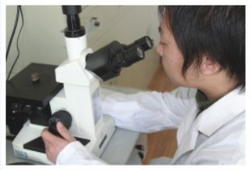

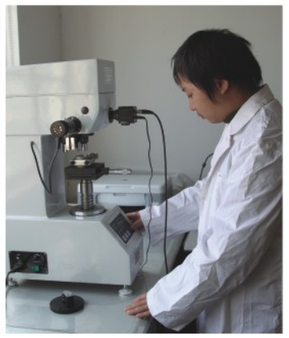

全电脑冷水机组、制冷压缩冷凝机组性能检测设备
Full-computer controlled performance inspection device of water-chilling unit and refrigerant compressor condensing unit

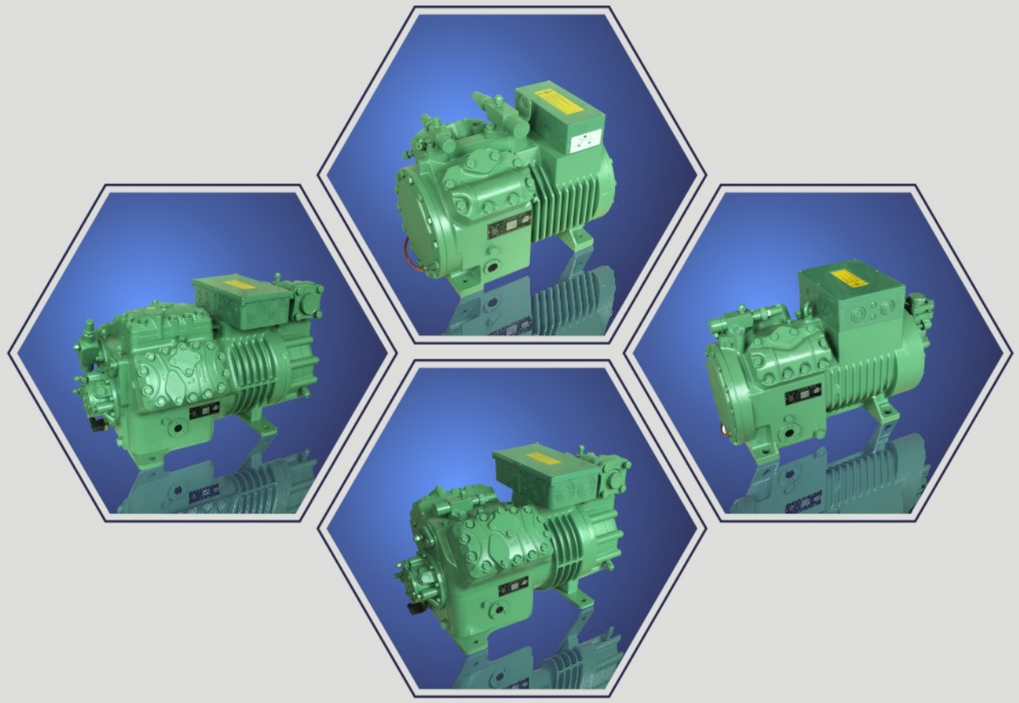

体积小、重量轻、噪音小、震动小、高效节能、绿色环保、安全稳定

## 精品配件
Products accessories

REGAL 电机 · HOERBIGER 阀板组 · 曲轴 · KRIWAN 保护器 · SWEP 板换

## 一流品质 铸就精品
The first-class quality of casting products

ZY · CRAA · 生产许可 · CE

## 使用范围
RANGE OF USE

| 制冷剂 Refrigerant / 项目 Item | R22 | R134a | R404A | R407A | R407B | R407C |
|---|---|---|---|---|---|---|
| 蒸发温度 ※ Evaporating temperature | -40 ~ +12.5℃ | -20 ~ +12.5℃ | -40 ~ +10℃ | -40 ~ -10℃ | -40 ~ -10℃ | -30 ~ +10℃ |
| 冷凝温度 Condensing temperature | 30 ~ 45℃(水冷)；30 ~ 50℃(风冷) 30 ~ 45℃(Water cooled)；30 ~ 50℃(Air cooled) | | | | | |
| 最大压力差 Max.pressure difference | 1.83MPa | | | | | |
| 最大压缩比 Max.compression ratio | 18 | | | | | |
| 最高排气温度 Max.discharge temperature | 135℃（排气管表面） 135℃(Discharge pipe surface) | | | | | |
| 吸气过热度 Suction superheat | 最小：10 度， 最大：保证排气温度小于135℃时的最大过热度<br>Min:10℃, Max:Value which maintains the discharge temperature below 135 ℃ | | | | | |
| 最高油温 Max.oil temperature | 80℃ | | | | | |
| 电源 Power supply | 3Ph 380/440V 50/60Hz | | | | | |
| 电机温度 Motor temperature | 105℃以下 Below 105℃ | | | | | |
| 冷冻机油 Refrigeration oil | SUNISO 3GS | SUNISO SL32S | | | | |
| 最高环境温度 Max.ambient temperature | 43℃ | | | | | |

※ 蒸发温度范围详见制冷量表。The range of evaporation temperature please sees the table of refrigerating capacity.

◎ 适用型号：BR3Z4–18.1～BR9G4–32.5 The applicable model：BR3Z4-18.1-BR9G4-32.5

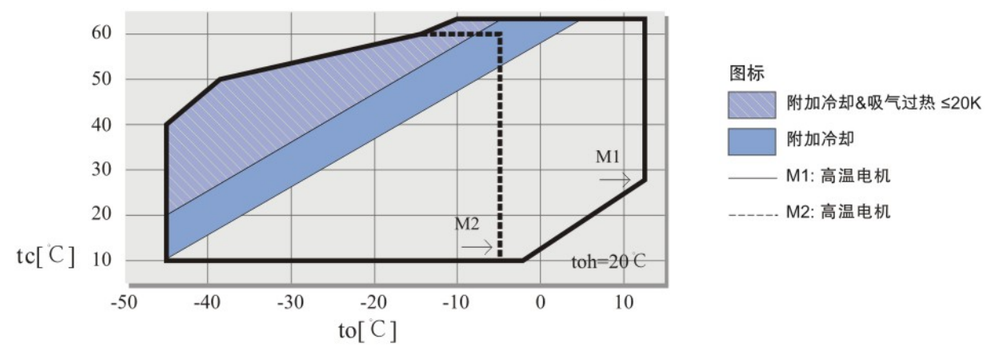


◎ 适用型号：BR6Z4–34.7 ~ BR50G6–151.6 The applicable model：BR6Z4-34.7-BR50G6-151.6

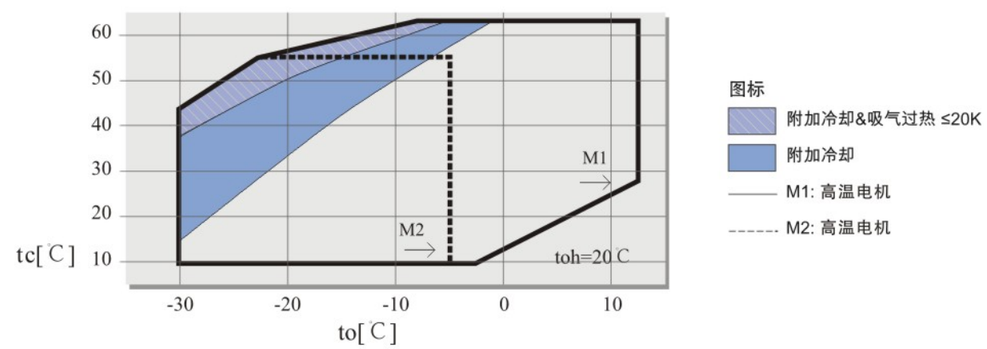

## 技术参数
TECHNICAL PARAMETERS

### ◎雪鹰系列 XUE YING SERIES

| 压缩机型号 Compressor model | 电机名义功率 Nominal motor power HP/KW | 排气量 Displacement (50Hz)m³/h | 缸数×直径×行程 Number of Cylinder × Diameter × Stroke mm | 油注入量 Oil injection volume L | 电源 Power supply V/ϕ/Hz | 电器参数 Electrical parameter 最大工作电流 Max operating current A | 启动/堵转电流 Starting current/ rotor locked current A | 曲轴箱加热器 Crankcase Heater (220V) W | 供油方式 Oil supply method | 重量(含冷冻油) Weight (including freezing oil) Kg |
|---|---|---|---|---|---|---|---|---|---|---|
| BF5G2-18.4 | 5/3.7 | 18.4 | 2×ϕ54×46 | 1.85 | 380~420/3/50 440~480/3/60 | 8.5 | 26/45 | 60 | 飞溅润滑 Splash lubrication | 101 |
| BF8G2-26.8 | 8/5.5 | 26.8 | 2×ϕ64×48 | 3.5 | | 13 | 41/74 | 120 | | 140 |
| BF8Z2-36.0 | 8/5.5 | 36 | 2×ϕ64×64 | 3.5 | | 11.4 | 41/74 | 120 | | 141 |
| BF10G2-36.0 | 10/7.5 | 36 | 2×ϕ64×64 | 3.5 | | 18.6 | 52/82 | 120 | | 145 |
| BF12Z3-54.0 | 12/8.8 | 54 | 3×ϕ64×64 | 4.8 | | 23.6 | 56/89 | 180 | | 184 |
| BF15G3-54.0 | 15/10.5 | 54 | 3×ϕ64×64 | 4.8 | | 28 | 72/102 | 180 | | 192 |

### ◎精品雪鹰系列 THE FINE XUE YING SERIES

| | | | | | | | | | | |
|---|---|---|---|---|---|---|---|---|---|---|
| BR3Z4-18.1 | 3/2.2 | 18.05 | 4×ϕ41×39.3 | 2.0 | 380~420/3/50 440~480/3/60 | 9.2 | 44.2 | 120 | 离心润滑 Centrifugal lubrication | 82 |
| BR5G4-18.1 | 5/3.7 | 18.05 | 4×ϕ41×39.3 | 2.0 | | 10.8 | 62.2 | 120 | | 86 |
| BR4Z4-22.7 | 4/3.0 | 22.72 | 4×ϕ46×39.3 | 2.0 | | 10.7 | 53.5 | 120 | | 84 |
| BR6G4-22.7 | 6/4.4 | 22.72 | 4×ϕ46×39.3 | 2.0 | | 13.2 | 62.2 | 120 | | 86 |
| BR5Z4-26.8 | 5/3.7 | 26.84 | 4×ϕ50×39.3 | 2.0 | | 13.5 | 62.2 | 120 | | 85.5 |
| BR7G4-26.8 | 7/5.1 | 26.84 | 4×ϕ50×39.3 | 2.0 | | 15.9 | 82.4 | 120 | | 88.5 |
| BR6Z4-32.5 | 6/4.4 | 32.48 | 4×ϕ55×39.3 | 2.0 | | 15.9 | 82.4 | 120 | | 90.5 |
| BR9G4-32.5 | 9/6.6 | 32.48 | 4×ϕ55×39.3 | 2.0 | | 20 | 82.4 | 120 | | 90.5 |
| BR6Z4-34.7 | 6/4.4 | 34.73 | 4×ϕ55×42 | 2.6 | 380~420YY/3/50 440~480YY/3/60 | 14 | 39/68 | 140 | 离心润滑 Centrifugal lubrication | 129 |
| BR10G4-34.7 | 10/7.5 | 34.73 | 4×ϕ55×42 | 2.6 | | 21 | 59/99 | 140 | | 139 |
| BR8Z4-41.3 | 8/5.5 | 41.33 | 4×ϕ60×42 | 2.6 | | 17 | 49/81 | 140 | | 134 |
| BR12G4-41.3 | 12/8.8 | 41.33 | 4×ϕ60×42 | 2.6 | | 24 | 69/113 | 140 | | 141 |
| BR10Z4-48.5 | 10/7.5 | 48.5 | 4×ϕ65×42 | 2.6 | | 21 | 59/99 | 140 | | 139 |
| BR15G4-48.5 | 15/10.5 | 48.5 | 4×ϕ65×42 | 2.6 | | 31 | 81/132 | 140 | | 142 |
| BR12Z4-56.3 | 12/8.8 | 56.25 | 4×ϕ70×42 | 2.6 | | 24 | 69/113 | 140 | | 141 |
| BR20G4-56.3 | 20/15 | 56.25 | 4×ϕ70×42 | 2.6 | | 37 | 97/158 | 140 | | 150 |
| BR13Z4-63.5 | 13/9.6 | 63.5 | 4×ϕ65×55 | 4.5 | 380~420YY/3/50 440~480YY/3/60 | 27 | 81/132 | 140 | 油泵润滑 Forced-lubrication | 193 |
| BR20G4-63.5 | 20/15 | 63.5 | 4×ϕ70×47.5 | 4.5 | | 37 | 97/158 | 140 | | 202 |
| BR15Z4-73.6 | 15/10.5 | 73.6 | 4×ϕ70×55 | 4.5 | | 31 | 81/132 | 140 | | 197 |
| BR25G4-73.6 | 25/18.5 | 73.6 | 4×ϕ70×55 | 4.5 | | 45 | 116/193 | 140 | | 205 |
| BR20Z4-84.5 | 20/15 | 84.5 | 4×ϕ75×55 | 4.5 | | 37 | 97/158 | 140 | | 200 |
| BR30G4-84.5 | 30/22 | 84.5 | 4×ϕ75×55 | 4.5 | | 53 | 135/220 | 140 | | 209 |
| BR25Z4-101.1 | 25/18.5 | 101.1 | 4×ϕ82×55 | 4.5 | | 45 | 116/193 | 140 | | 202 |
| BR35G4-101.1 | 35/25.5 | 101.1 | 4×ϕ82×55 | 4.5 | | 61 | 147/262 | 140 | | 211 |
| BR22Z6-95.3 | 22/16.2 | 95.3 | 6×ϕ65×55 | 4.25 | 380~420YY/3/50 440~480YY/3/60 | | 116/193 | 140 | 油泵润滑 Forced-lubrication | 226 |
| BR33G6-95.3 | 33/24.3 | 95.3 | 6×ϕ65×55 | 4.25 | | | 147/262 | 140 | | 244 |
| BR25Z6-110.5 | 25/18.5 | 110.5 | 6×ϕ70×55 | 4.25 | | | 116/193 | 140 | | 237 |
| BR35G6-110.5 | 35/25.5 | 110.5 | 6×ϕ70×55 | 4.25 | | | 147/262 | 140 | | 248 |
| BR30Z6-126.8 | 30/22 | 126.8 | 6×ϕ75×55 | 4.75 | | 53 | 135/220 | 140 | | 241 |
| BR40G6-126.8 | 40/30 | 126.8 | 6×ϕ75×55 | 4.75 | | 78 | 180/323 | 140 | | 247 |
| BR40Z6-151.6 | 40/30 | 151.6 | 6×ϕ82×55 | 4.75 | | 78 | 180/323 | 140 | | 243 |
| BR50G6-151.6 | 50/37 | 151.6 | 6×ϕ82×55 | 4.75 | | 92 | 226/404 | 140 | | 248 |

## 技术参数
TECHNICAL PARAMETERS

| 压缩机型号 Compressor model | 电机名义功率 Nominal motor power HP/KW | 排气量 Displacement (50Hz)m³/h 低压 Low Pressure | 高压 High Pressure | 缸数×直径×行程 Number of Cylinder × Diameter × Stroke mm | 油注入量 Oil injection volume L | 电源 Power supply V/ϕ/Hz | 电器参数 Electrical parameter 最大工作电流 Max operating current A | 启动/堵转电流 Starting current/ rotor locked current A | 曲轴箱加热器 Crankcase Heater (220V) W | 供油方式 Oil supply method | 重量(含冷冻油) Weight (including freezing oil) Kg |
|---|---|---|---|---|---|---|---|---|---|---|---|
| BR5DS4-10.3 | 5/3.7 | 16.24 | 10.3 | 4×ϕ55/46×39.3 | 2.0 | 380~420YY/3/50 440~480YY/3/60 | 14 | 39/68 | 120 | 离心润滑 Centrifugal lubrication | 87 |
| BR8DS4-17.9 | 8/5.5 | 28.12 | 17.9 | 4×ϕ70/55×42 | 2.6 | | 17 | 49/81 | 140 | | 135 |
| BR12DS4-27.0 | 12/8.8 | 42.3 | 27.0 | 4×ϕ75/60×55 | 4.5 | | 24 | 69/113 | 140 | 油泵润滑 Forced-lubrication | 180 |
| BR16DS6-31.8 | 16/11.7 | 63.5 | 31.8 | 6×ϕ65/65×55 | 4.75 | | 31 | 81/132 | 140 | | 220 |
| BR20DS6-36.8 | 20/15 | 73.6 | 36.8 | 6×ϕ70/70×55 | 4.75 | | 37 | 97/158 | 140 | | 235 |
| BR25DS6-42.3 | 25/18.5 | 84.5 | 42.3 | 6×ϕ75/75×55 | 4.75 | | 45 | 116/193 | 140 | | 248 |
| BR30DS6-50.5 | 30/22 | 101.1 | 50.5 | 6×ϕ82/82×55 | 4.75 | | 53 | 135/220 | 140 | | 249 |
| BR40DS6T-73.6 | 2×20/2×15 | 2×73.6 | 2×36.8 | 6+6×ϕ70×55 | 2×4.75 | 380~420YY/3/50 440~480YY/3/60 | 2×37 | 2×97/2×158 | 2×140 | 油泵润滑 Forced-lubrication | 510 |
| BR50DS6T-84.6 | 2×25/2×18.5 | 2×84.5 | 2×42.3 | 6+6×ϕ75×55 | 2×4.75 | | 2×45 | 2×116/2×193 | 2×140 | | 536 |
| BR60DS6T-101.0 | 2×30/2×22 | 2×101.1 | 2×50.5 | 6+6×ϕ82×55 | 2×4.75 | | 2×53 | 2×135/2×220 | 2×140 | | 538 |
| BR60G4T-169.0 | 2×30/2×22 | | 2×84.5 | 4+4×ϕ75×55 | 2×4.5 | | 2×53 | 2×135/2×220 | 2×140 | | 458 |
| BR50Z4T-202.2 | 2×25/2×18.5 | | 2×101.1 | 4+4×ϕ82×55 | 2×4.5 | | 2×45 | 2×116/2×193 | 2×140 | | 445 |
| BR70G4T-202.2 | 2×35/2×25.5 | | 2×101.1 | 4+4×ϕ82×55 | 2×4.5 | | 2×61 | 2×147/2×262 | 2×140 | | 462 |
| BR50Z6T-221 | 2×25/2×18.5 | | 2×110.5 | 6+6×ϕ70×55 | 2×4.75 | | 2×45 | 2×116/2×193 | 2×140 | | 514 |
| BR70G6T-221 | 2×35/2×25.5 | | 2×110.5 | 6+6×ϕ70×55 | 2×4.75 | | 2×61 | 2×147/2×262 | 2×140 | | 524 |
| BR60Z6T-253.6 | 2×30/2×22 | | 2×126.8 | 6+6×ϕ75×55 | 2×4.75 | | 2×53 | 2×135/2×220 | 2×140 | | 522 |
| BR80G6T-253.6 | 2×40/2×30 | | 2×126.8 | 6+6×ϕ75×55 | 2×4.75 | | 2×78 | 2×180/2×323 | 2×140 | | 534 |
| BR80Z6T-303.2 | 2×40/2×30 | | 2×151.6 | 6+6×ϕ82×55 | 2×4.75 | | 2×78 | 2×180/2×323 | 2×140 | | 526 |
| BR100G6T-303.2 | 2×50/2×37 | | 2×151.6 | 6+6×ϕ82×55 | 2×4.75 | | 2×92 | 2×226/2×404 | 2×140 | | 536 |

## 编号说明
NUMBER INDICATES

BRC5G4T-18.4EB

| | |
|---|---|
| BR BF | 半封闭制冷压缩机 Semi-closed refrigeration compressor |
| C | C-船用，EX-防爆，其他字母-特种机型（备用），普通无表示 C-for ship, EX-explosion-proof, other letters-special types (standby), ordinary type isn't denoted. |
| 5 | 电机名义功率(HP) Nominal power of the motor (HP) |
| G | G-高温机，Z-中温机，DS-低温双级机 G-High-temperature machine; Z-medium-temperature machine; DS-low-temperature double-stage machine |
| 4 | 缸数 Cylinder number |
| T | T-对接机，单机无表示 T-butt joint machine; single machine isn't denoted. |
| 18.4 | 理论排气量(m³/h) Theoretical displacement (m³/h) |
| E | 冷冻油类型:E-酯类油(R404A、R134a、R407C的新工质)，矿物油不表示(R22、R502) Refrigeration oil type: E-ester oil (R404A, R134a, R407C new working mediums); mineral oil isn't denoted (R22, R502) |
| B | 改型代码 Remolding code |

# R22

基于吸气温度20℃，液体没有过冷，电机转速=1450转/分（50Hz）
Suction temperature 20℃, No liguid subcooling, Rotate speed of the motor is 1450 rpm (50Hz)

## 制冷量表
REFRIGERATION SCALE

| 型号 Model | 冷凝温度 Condensing temperature | 制冷量 $Q_0$（KW） Refrigerating capacity $Q_0$ (KW) | | | | | | | | | | | | | | |
|---|---|---|---|---|---|---|---|---|---|---|---|---|---|---|---|---|
| | | 蒸发温度 ℃ Evaporating temperature ℃ | | | | | | | | | | | | | | |
| | | 12.5 | 10 | 7.5 | 5 | 0 | -5 | -10 | -15 | -20 | -25 | -30 | -35 | -40 | -45 | -50 |
| BF5G2-18.4 | 30 | 24.9 | 22.9 | 20.7 | 19.3 | 16.4 | 13.1 | 10.7 | 8.7 | 6.8 | 5.3 | 3.8 | 2.6 | 1.7 | | |
| | 40 | 22.3 | 20.5 | 18.5 | 17.2 | 14.5 | 11.7 | 9.6 | 7.6 | 6.0 | 4.3 | 3.1 | | | | |
| BF8G2-26.8 | 30 | 36.0 | 33.0 | 29.8 | 27.0 | 21.5 | 19.3 | 15.4 | 12.4 | 9.6 | 7.3 | 5.4 | 3.8 | 2.5 | | |
| | 40 | 32.2 | 29.5 | 26.6 | 24.8 | 19.8 | 17.0 | 13.4 | 10.5 | 8.2 | 6.0 | 4.4 | | | | |
| BF8Z2-36.0 | 30 | | | | | | 26.5 | 21.3 | 17.4 | 13.7 | 10.7 | 8.1 | 5.9 | 4.0 | | |
| | 40 | | | | | | 23.7 | 19.4 | 15.3 | 12.1 | 8.9 | 6.6 | | | | |
| BF10G2-36.0 | 30 | 49.5 | 45.4 | 41.0 | 38.3 | 32.5 | 25.9 | 20.6 | 16.7 | 13.0 | | | | | | |
| | 40 | 44.3 | 40.7 | 36.7 | 34.2 | 28.9 | 23.2 | 18.5 | 14.6 | 11.4 | | | | | | |
| BF12Z3-54.0 | 30 | | | | | | 38.9 | 31.7 | 25.3 | 20.1 | 15.7 | 11.9 | 8.7 | 5.9 | | |
| | 40 | | | | | | 34.8 | 28.2 | 22.5 | 17.8 | 13.2 | 9.7 | | | | |
| BF15G3-54.0 | 30 | 73.2 | 67.2 | 60.6 | 56.5 | 47.9 | 38.1 | 30.7 | 24.3 | 19.2 | | | | | | |
| | 40 | 65.4 | 60.0 | 54.0 | 50.3 | 42.5 | 34.1 | 27.0 | 22.5 | 16.8 | | | | | | |
| BR3Z4-18.1 | 30 | | | | | | 12.7 | 10.3 | 8.3 | 7.0 | 5.5 | 4.2 | 3.1 | 2.3 | | |
| | 40 | | | | | | 11.2 | 9.0 | 7.1 | 6.0 | 4.6 | 3.5 | 2.5 | 1.7 | | |
| | 50 | | | | | | 9.6 | 7.6 | 5.9 | 4.9 | 3.7 | 2.7 | 1.9 | | | |
| BR5G4-18.1 | 30 | 24.3 | 22.3 | 20.4 | 18.7 | 15.5 | 12.7 | 10.3 | 8.3 | 7.0 | 5.5 | 4.3 | 3.1 | 2.3 | | |
| | 40 | 21.8 | 19.9 | 18.2 | 16.6 | 13.7 | 11.2 | 9.0 | 7.1 | 6.0 | 4.6 | 3.5 | 2.5 | 1.7 | | |
| | 50 | 19.1 | 17.5 | 15.9 | 14.5 | 11.9 | 9.6 | 7.6 | 5.9 | 4.9 | 3.7 | 2.7 | 1.9 | | | |
| BR4Z4-22.7 | 30 | | | | | | 15.7 | 12.8 | 10.3 | 8.8 | 6.9 | 5.3 | 4.0 | 2.9 | | |
| | 40 | | | | | | 13.8 | 11.1 | 8.8 | 7.5 | 5.8 | 4.4 | 3.2 | 2.2 | | |
| | 50 | | | | | | 11.8 | 9.4 | 7.3 | 6.1 | 4.6 | 3.4 | 2.4 | | | |
| BR6G4-22.7 | 30 | 29.9 | 27.4 | 25.1 | 23.0 | 19.1 | 15.7 | 12.8 | 10.3 | 8.8 | 6.9 | 5.3 | 4.0 | 2.9 | | |
| | 40 | 26.7 | 24.5 | 22.4 | 20.4 | 16.9 | 13.8 | 11.1 | 8.8 | 7.5 | 5.8 | 4.4 | 3.2 | 2.2 | | |
| | 50 | 23.4 | 21.4 | 19.5 | 17.8 | 14.6 | 11.8 | 9.4 | 7.3 | 6.1 | 4.6 | 3.4 | 2.4 | | | |
| BR5Z4-26.8 | 30 | | | | | | 19.1 | 15.5 | 12.5 | 10.2 | 8.1 | 6.2 | 4.6 | 3.3 | | |
| | 40 | | | | | | 16.8 | 13.5 | 10.7 | 8.8 | 6.8 | 5.2 | 3.8 | 2.6 | | |
| | 50 | | | | | | 14.4 | 11.5 | 9.0 | 7.2 | 5.5 | 4.1 | 2.9 | | | |
| BR7G4-26.8 | 30 | 36.4 | 33.4 | 30.6 | 27.9 | 23.2 | 19.1 | 15.6 | 12.5 | 10.2 | 8.1 | 6.2 | 4.6 | 3.3 | | |
| | 40 | 32.4 | 29.7 | 27.2 | 24.8 | 20.5 | 16.8 | 13.5 | 10.8 | 8.8 | 6.8 | 5.2 | 3.8 | 2.6 | | |
| | 50 | 28.5 | 26.0 | 23.8 | 21.6 | 17.8 | 14.4 | 11.5 | 9.0 | 7.2 | 5.5 | 4.1 | 2.9 | | | |
| BR6Z4-32.5 | 30 | | | | | | 22.9 | 18.7 | 15.1 | 11.9 | 9.3 | 7.0 | | | | |
| | 40 | | | | | | 20.2 | 16.4 | 13.0 | 10.2 | 7.7 | 5.6 | | | | |
| | 50 | | | | | | 17.5 | 14.0 | 10.9 | 8.3 | 6.1 | | | | | |
| BR9G4-32.5 | 30 | 43.3 | 39.7 | 36.4 | 33.3 | 27.7 | 22.9 | 18.7 | 15.1 | 11.9 | 9.3 | 7.0 | | | | |
| | 40 | 38.8 | 35.6 | 32.6 | 29.7 | 24.7 | 20.2 | 16.4 | 13.0 | 10.2 | 7.7 | 5.6 | | | | |
| | 50 | 34.2 | 31.3 | 28.6 | 26.0 | 21.5 | 17.4 | 14.0 | 10.9 | 8.3 | 6.1 | | | | | |
| BR6Z4-34.7 | 30 | | | | | | 25.1 | 20.6 | 16.7 | 13.3 | 10.4 | 8.0 | 5.9 | 4.2 | | |
| | 40 | | | | | | 22.2 | 18.1 | 14.6 | 11.5 | 9.0 | 6.7 | 4.8 | 3.2 | | |
| | 50 | | | | | | 19.2 | 15.6 | 12.4 | 9.8 | 7.3 | 5.3 | 3.6 | 2.2 | | |
| BR10G4-34.7 | 30 | 47.7 | 43.7 | 40.1 | 36.7 | 30.6 | 25.2 | 20.6 | 16.6 | 13.1 | 10.2 | 7.6 | | | | |
| | 40 | 42.2 | 38.7 | 35.5 | 32.4 | 27.0 | 22.2 | 18.1 | 14.5 | 11.4 | 8.7 | 6.5 | | | | |
| | 50 | 36.8 | 33.8 | 30.9 | 28.2 | 23.4 | 19.2 | 15.5 | 12.3 | 9.6 | 7.3 | | | | | |
| BR8Z4-41.3 | 30 | | | | | | 30.7 | 25.2 | 20.4 | 16.3 | 12.8 | 9.8 | 7.3 | 5.2 | | |
| | 40 | | | | | | 27.0 | 22.1 | 17.8 | 14.1 | 10.9 | 8.1 | 5.9 | 4.0 | | |
| | 50 | | | | | | 23.4 | 19.0 | 15.2 | 11.9 | 9.0 | 6.6 | 4.6 | 2.9 | | |
| BR12G4-41.3 | 30 | 57.0 | 52.4 | 48.0 | 44.0 | 36.7 | 30.3 | 24.8 | 20.0 | 15.9 | 12.4 | 9.4 | | | | |
| | 40 | 50.7 | 46.6 | 42.7 | 39.1 | 32.5 | 26.8 | 21.8 | 17.5 | 13.8 | 10.6 | 7.9 | | | | |
| | 50 | 44.3 | 40.7 | 37.2 | 34.0 | 28.2 | 23.1 | 18.7 | 14.9 | 11.7 | 8.9 | | | | | |
| BR10Z4-48.5 | 30 | | | | | | 35.6 | 29.2 | 23.7 | 18.9 | 14.8 | 11.3 | 8.3 | 5.9 | | |
| | 40 | | | | | | 31.4 | 25.6 | 20.6 | 16.3 | 12.7 | 9.5 | 6.8 | 4.6 | | |
| | 50 | | | | | | 27.2 | 22.1 | 17.7 | 13.8 | 10.5 | 7.7 | 5.3 | 3.3 | | |
| BR15G4-48.5 | 30 | 68.4 | 62.7 | 57.5 | 52.6 | 43.8 | 36.1 | 29.5 | 23.7 | 18.8 | 14.5 | 10.9 | | | | |
| | 40 | 60.8 | 55.8 | 51.1 | 46.7 | 38.8 | 31.9 | 25.9 | 20.8 | 16.3 | 12.5 | 9.3 | | | | |
| | 50 | 53.3 | 48.8 | 44.7 | 40.8 | 33.8 | 27.7 | 22.4 | 17.8 | 13.9 | 10.4 | | | | | |
| BR12Z4-56.3 | 30 | | | | | | 41.1 | 33.7 | 27.3 | 21.8 | 17.2 | 12.9 | 9.5 | 6.7 | | |
| | 40 | | | | | | 36.6 | 29.9 | 24.1 | 19.1 | 14.9 | 11.0 | 7.9 | 5.4 | | |
| | 50 | | | | | | 32.0 | 26.0 | 20.8 | 16.3 | 12.2 | 8.9 | 6.2 | 3.8 | | |
| BR20G4-56.3 | 30 | 79.1 | 72.6 | 66.5 | 60.9 | 50.7 | 41.9 | 34.2 | 27.5 | 21.8 | 16.9 | 12.8 | | | | |
| | 40 | 70.6 | 64.7 | 59.3 | 54.2 | 45.0 | 37.0 | 30.0 | 24.0 | 18.9 | 14.5 | 10.7 | | | | |
| | 50 | 61.8 | 56.7 | 51.8 | 47.3 | 39.2 | 32.1 | 25.9 | 20.6 | 16.0 | 12.1 | | | | | |

# R22

基于吸气温度20℃，液体没有过冷，电机转速=1450转/分（50Hz）
Suction temperature 20℃, No liguid subcooling, Rotate speed of the motor is 1450 rpm (50Hz)

## 制冷量表
REFRIGERATION SCALE

| 型号 Model | 冷凝温度 Condensing temperature | 制冷量 $Q_0$（KW） Refrigerating capacity $Q_0$ (KW) | | | | | | | | | | | | | | |
|---|---|---|---|---|---|---|---|---|---|---|---|---|---|---|---|---|
| | | 蒸发温度 ℃ Evaporating temperature ℃ | | | | | | | | | | | | | | |
| | | 12.5 | 10 | 7.5 | 5 | 0 | -5 | -10 | -15 | -20 | -25 | -30 | -35 | -40 | -45 | -50 |
| BR13Z4-63.5 | 30 | | | | | | 45.6 | 37.2 | 30.0 | 23.8 | 18.5 | 14.1 | 10.3 | 7.2 | | |
| | 40 | | | | | | 40.8 | 33.2 | 26.6 | 20.9 | 16.1 | 11.9 | 8.4 | 5.5 | | |
| | 50 | | | | | | 36.0 | 29.1 | 23.2 | 18.0 | 13.6 | 9.9 | 6.8 | 4.3 | | |
| BR20G4-63.5 | 30 | 85.8 | 78.8 | 72.3 | 66.2 | 55.2 | 45.6 | 37.2 | 30.1 | 23.9 | 18.7 | 14.2 | | | | |
| | 40 | 77.6 | 71.3 | 65.4 | 59.8 | 49.7 | 40.9 | 33.3 | 26.8 | 21.1 | 16.2 | 12.2 | | | | |
| | 50 | 69.8 | 64.0 | 58.6 | 53.5 | 44.5 | 36.4 | 29.5 | 23.6 | 18.4 | 14.0 | | | | | |
| BR15Z4-73.6 | 30 | | | | | | 52.8 | 43.1 | 34.8 | 27.7 | 21.6 | 16.4 | 12.0 | 8.3 | | |
| | 40 | | | | | | 47.4 | 38.6 | 31.0 | 24.4 | 18.7 | 13.9 | 9.8 | 6.4 | | |
| | 50 | | | | | | 42.2 | 34.2 | 27.3 | 21.1 | 15.9 | 11.6 | 8.0 | | | |
| BR25G4-73.6 | 30 | 99.3 | 91.2 | 83.7 | 76.6 | 63.9 | 52.8 | 43.1 | 34.8 | 27.7 | 21.6 | 16.4 | | | | |
| | 40 | 89.9 | 82.6 | 75.7 | 69.2 | 57.6 | 47.4 | 38.6 | 31.0 | 24.4 | 18.8 | 14.1 | | | | |
| | 50 | 80.8 | 74.1 | 67.9 | 62.0 | 51.5 | 42.2 | 34.2 | 27.3 | 21.3 | 16.2 | | | | | |
| BR20Z4-84.5 | 30 | | | | | | 60.5 | 49.5 | 40.0 | 31.8 | 24.9 | 19.0 | 13.9 | 9.7 | | |
| | 40 | | | | | | 54.4 | 44.3 | 35.6 | 28.2 | 21.6 | 16.1 | 11.4 | 7.5 | | |
| | 50 | | | | | | 48.5 | 39.3 | 31.5 | 24.4 | 18.5 | 13.5 | 9.3 | | | |
| BR30G4-84.5 | 30 | 114.1 | 104.8 | 96.1 | 87.9 | 73.3 | 60.5 | 49.5 | 40.0 | 31.8 | 24.9 | 19.0 | | | | |
| | 40 | 103.2 | 94.7 | 86.8 | 79.4 | 66.0 | 54.4 | 44.3 | 35.6 | 28.2 | 219 | 16.5 | | | | |
| | 50 | 92.7 | 85.0 | 77.9 | 71.1 | 59.0 | 48.5 | 39.3 | 31.5 | 24.7 | 19.0 | | | | | |
| BR25Z4-101.1 | 30 | | | | | | 72.3 | 59.2 | 47.8 | 38.0 | 29.8 | 22.7 | 16.6 | 11.6 | | |
| | 40 | | | | | | 65.0 | 53.0 | 42.6 | 33.7 | 25.8 | 19.2 | 13.6 | 9.0 | | |
| | 50 | | | | | | 58.0 | 47.0 | 33.7 | 29.2 | 22.1 | 16.1 | 11.1 | | | |
| BR35G4-101.1 | 30 | 136.4 | 125.3 | 114.9 | 105.1 | 87.6 | 72.3 | 59.2 | 47.8 | 38.0 | 29.8 | 22.7 | | | | |
| | 40 | 123.4 | 113.2 | 103.8 | 94.9 | 78.9 | 65.0 | 53.0 | 42.6 | 33.7 | 26.2 | 19.7 | | | | |
| | 50 | 110.8 | 101.6 | 93.1 | 85.0 | 70.5 | 58.0 | 47.0 | 33.7 | 29.5 | 22.7 | | | | | |
| BR22Z6-95.3 | 30 | | | | | | 68.3 | 55.8 | 45.0 | 35.7 | 27.8 | 21.2 | 15.5 | 10.7 | | |
| | 40 | | | | | | 61.2 | 49.8 | 39.9 | 31.4 | 24.2 | 17.9 | 12.7 | 8.3 | | |
| | 50 | | | | | | 54.0 | 43.7 | 34.7 | 27.1 | 20.5 | 14.9 | 10.2 | 6.4 | | |
| BR33G6-95.3 | 30 | 130.1 | 119.4 | 109.4 | 100.1 | 83.4 | 68.8 | 56.2 | 45.3 | 36.0 | 28.1 | 21.3 | | | | |
| | 40 | 117.4 | 107.6 | 98.6 | 90.1 | 74.8 | 61.6 | 50.1 | 40.2 | 31.7 | 24.4 | 18.2 | | | | |
| | 50 | 104.4 | 95.7 | 87.6 | 80.0 | 66.3 | 54.3 | 44.0 | 35.0 | 27.3 | 20.8 | | | | | |
| BR25Z6-110.5 | 30 | | | | | | 78.5 | 64.1 | 51.7 | 41.1 | 32.0 | 24.6 | 18.0 | 12.5 | | |
| | 40 | | | | | | 70.3 | 57.2 | 45.9 | 36.1 | 27.8 | 20.8 | 14.8 | 9.7 | | |
| | 50 | | | | | | 62.6 | 50.6 | 40.3 | 31.4 | 23.7 | 17.2 | 11.9 | 7.4 | | |
| BR35G6-110.5 | 30 | 149.1 | 136.9 | 125.5 | 114.8 | 95.6 | 79.0 | 64.5 | 52.0 | 41.3 | 32.2 | 24.4 | | | | |
| | 40 | 134.6 | 123.5 | 113.2 | 103.5 | 86.0 | 70.8 | 57.6 | 46.2 | 36.4 | 28.1 | 20.9 | | | | |
| | 50 | 120.9 | 110.8 | 101.4 | 92.7 | 76.8 | 63.0 | 51.0 | 40.6 | 31.7 | 24.1 | | | | | |
| BR30Z6-126.8 | 30 | | | | | | 90.8 | 74.3 | 60.0 | 47.8 | 37.3 | 28.5 | 21.0 | 14.6 | | |
| | 40 | | | | | | 81.6 | 66.5 | 53.5 | 42.3 | 32.5 | 24.2 | 17.2 | 11.3 | | |
| | 50 | | | | | | 72.8 | 59.1 | 47.2 | 36.7 | 27.8 | 20.3 | 14.0 | | | |
| BR40G6-126.8 | 30 | 171.2 | 157.2 | 144.1 | 131.9 | 109.9 | 90.8 | 74.3 | 60.0 | 47.8 | 37.3 | 28.5 | | | | |
| | 40 | 154.9 | 142.2 | 130.3 | 119.1 | 99.1 | 81.6 | 66.5 | 53.5 | 42.3 | 32.8 | 24.8 | | | | |
| | 50 | 139.1 | 127.6 | 116.8 | 106.8 | 88.6 | 72.8 | 59.1 | 47.2 | 37.1 | 28.5 | | | | | |
| BR40Z6-151.6 | 30 | | | | | | 107.1 | 87.7 | 71.0 | 56.7 | 44.5 | 34.1 | 25.2 | 17.7 | | |
| | 40 | | | | | | 96.5 | 78.8 | 63.6 | 50.5 | 38.9 | 29.2 | 21.0 | 14.0 | | |
| | 50 | | | | | | 86.3 | 70.3 | 56.5 | 44.1 | 33.7 | 24.8 | 17.3 | | | |
| BR50G6-151.6 | 30 | 201.1 | 184.7 | 169.5 | 155.2 | 129.4 | 107.1 | 87.7 | 71.0 | 56.5 | 44.5 | 34.2 | | | | |
| | 40 | 182.1 | 167.2 | 153.3 | 140.3 | 116.9 | 96.5 | 78.8 | 63.6 | 50.5 | 39.4 | 30.0 | | | | |
| | 50 | 163.9 | 150.4 | 137.8 | 126.0 | 104.8 | 86.3 | 70.3 | 56.5 | 44.7 | 34.6 | | | | | |
| BR5DS4-10.3 | 30 | | | | | | | | | 8.1 | 6.7 | 5.4 | 4.4 | 3.5 | 2.6 | 2.0 |
| | 40 | | | | | | | | | 7.8 | 6.4 | 5.3 | 4.2 | 3.4 | 2.6 | 1.9 |
| | 50 | | | | | | | | | 7.6 | 6.3 | 5.1 | 4.1 | 3.2 | | |
| BR8DS4-17.9 | 30 | | | | | | | | | 14.1 | 11.7 | 9.6 | 7.7 | 6.1 | 4.7 | 3.5 |
| | 40 | | | | | | | | | 13.6 | 11.3 | 9.3 | 7.5 | 5.9 | 4.5 | 3.3 |
| | 50 | | | | | | | | | 13.1 | 10.9 | 8.9 | 7.2 | 5.6 | | |
| BR12DS4-27.0 | 30 | | | | | | | | | 21.3 | 17.7 | 14.5 | 11.7 | 9.3 | 7.2 | 5.4 |
| | 40 | | | | | | | | | 20.6 | 17.1 | 14.0 | 11.3 | 8.9 | 6.8 | 5.0 |
| | 50 | | | | | | | | | 19.9 | 16.5 | 13.5 | 10.9 | 8.5 | | |
| BR16DS6-31.8 | 30 | | | | | | | | | 30.6 | 25.6 | 21.1 | 17.2 | 13.7 | 10.6 | 7.9 |
| | 40 | | | | | | | | | 29.9 | 25.0 | 20.7 | 16.8 | 13.4 | 10.2 | 7.4 |
| | 50 | | | | | | | | | 29.3 | 24.6 | 20.3 | 16.5 | 13.1 | | |